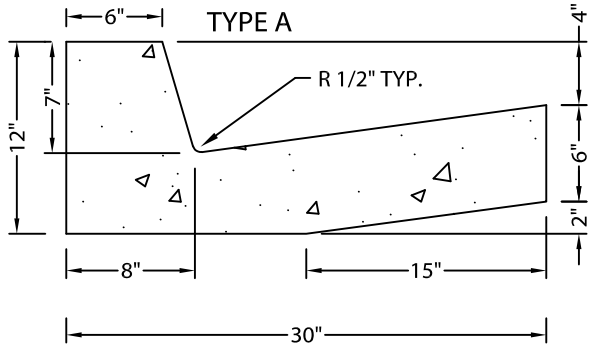

30" CURB & GUTTER

0.57 YD. 3/10 LINEAR FT.
N.T.S.

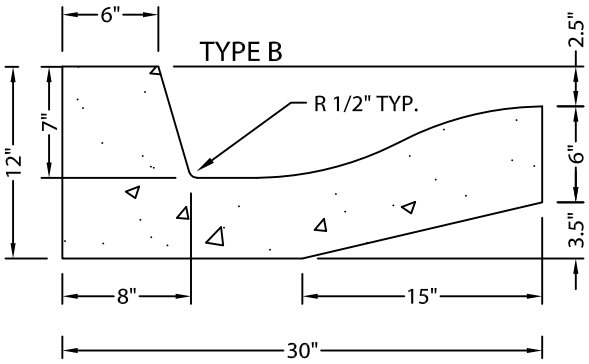

30" IRRIGATION CURB & GUTTER

0.57 YD. 3/10 LINEAR FT.
N.T.S.

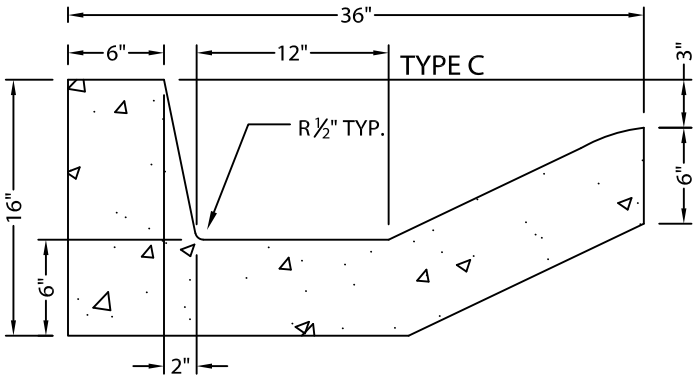

36" CURB & GUTTER

0.81 YD. 3/10 LINEAR FT.
N.T.S.

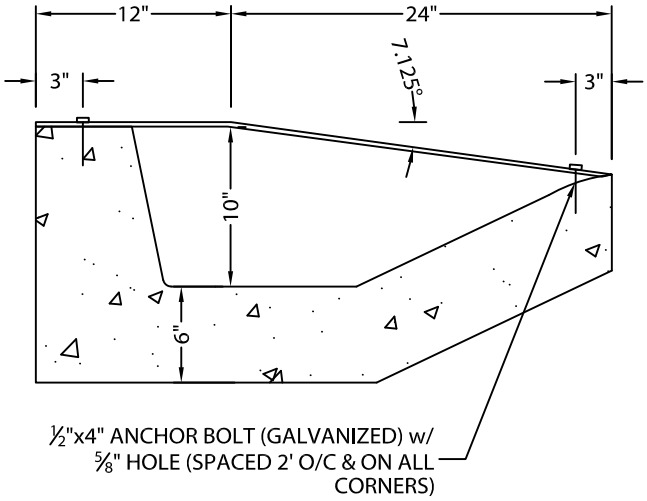

COVERED DRIVE or SIDEWALK ACCESS RAMP*

N.T.S.
USING 1/2" LARGE PATTERN INLAND 4-WAY PLATE (GALVANIZED PAINTED OR HOT DIPPED) LENGTHS TO BE SAME AS DRIVEWAY OR SIDEWALK WIDTHS

* USE ONLY WHEN APPROVED BY THE CITY ENGINEER.

NOTES:

1. ALL CURB AND GUTTER TYPES SHALL HAVE:
2. CONTRACTION JOINTS EVERY 10' O.C. ½" DEEP.
3. EXPANSION JOINTS AT THE P.C. AND P.T. OF A STREET INTERSECTION CURB RADIUS RETURN.

ENOCH CITY

ENOCH CITY
900 EAST MIDVALLEY RD
Enoch, UT 84721
Tel. (435) 586-1119

Copyright © 2019

CURB & GUTTER

SCALE:
N.T.S.

DATE:
FEB. 2019

DETAIL No.:
C1.1

SHEET:
1 of 2

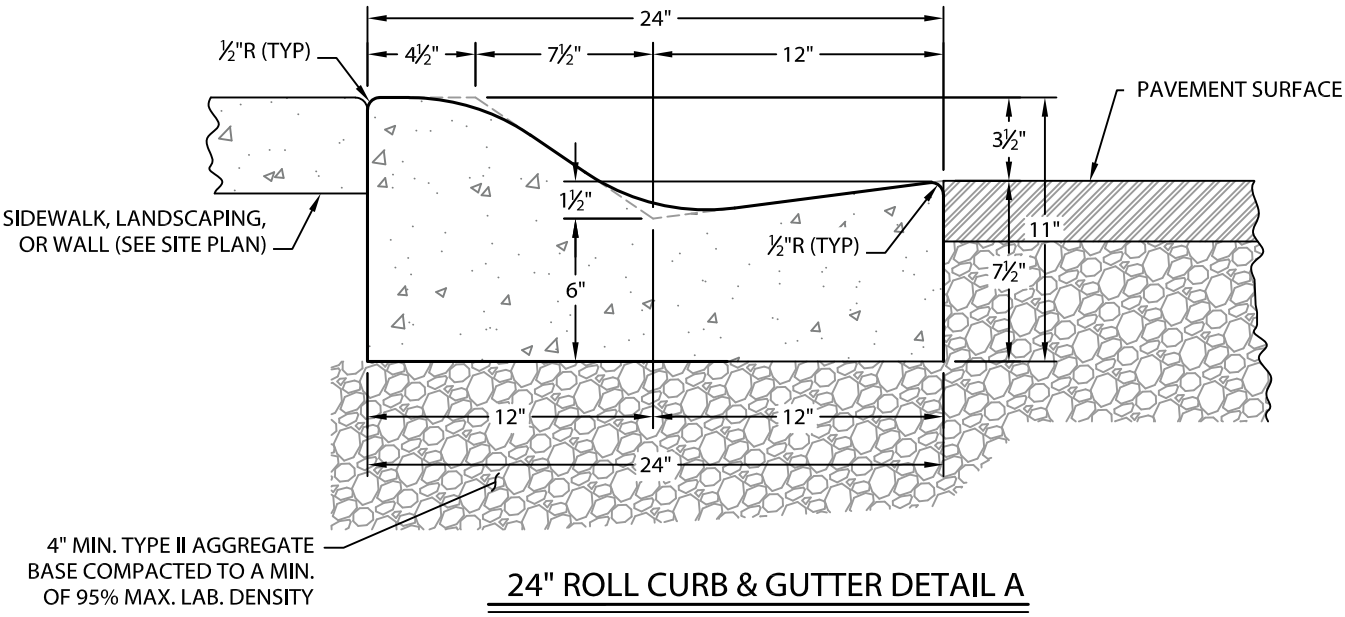

24" ROLL CURB & GUTTER DETAIL A

N.T.S.

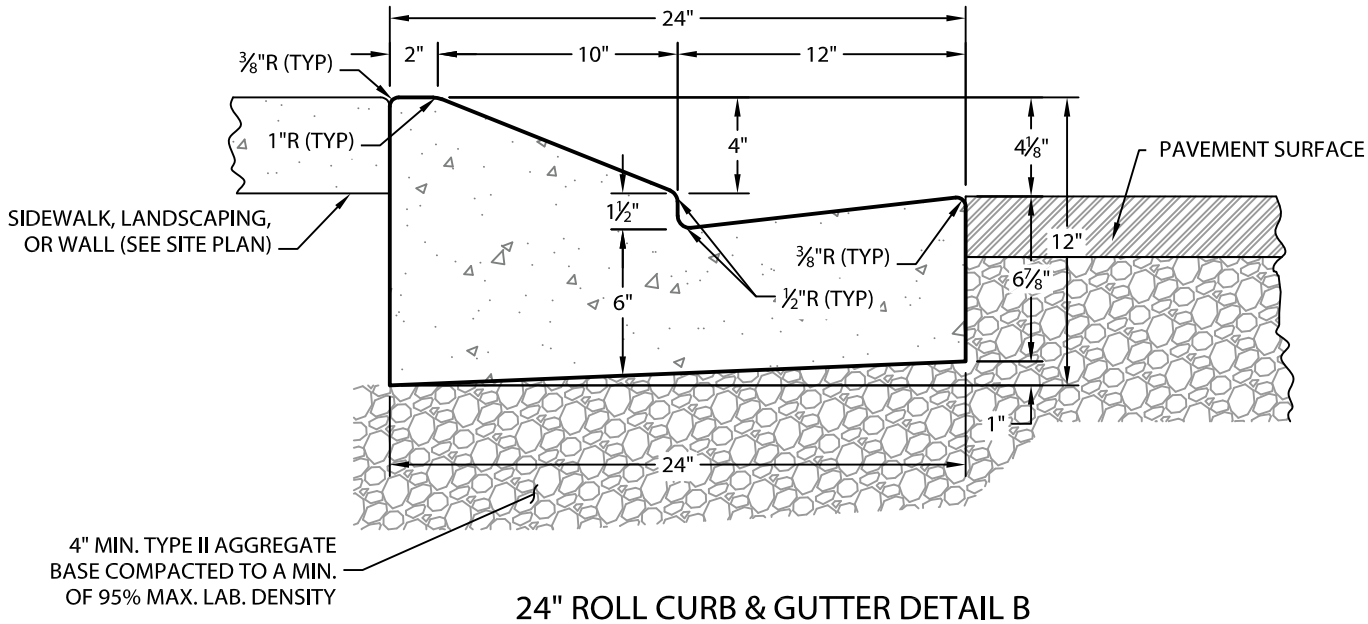

24" ROLL CURB & GUTTER DETAIL B

N.T.S.

ENOCH CITY

ENOCH CITY

900 EAST MIDVALLEY RD
Enoch, UT 84721
Tel. (435) 586-1119

Copyright © 2019

ROLLING CURB & GUTTER

SCALE:
N.T.S.

DATE:
FEB. 2019

DETAIL No.:
C1.2

SHEET:
2 of 2

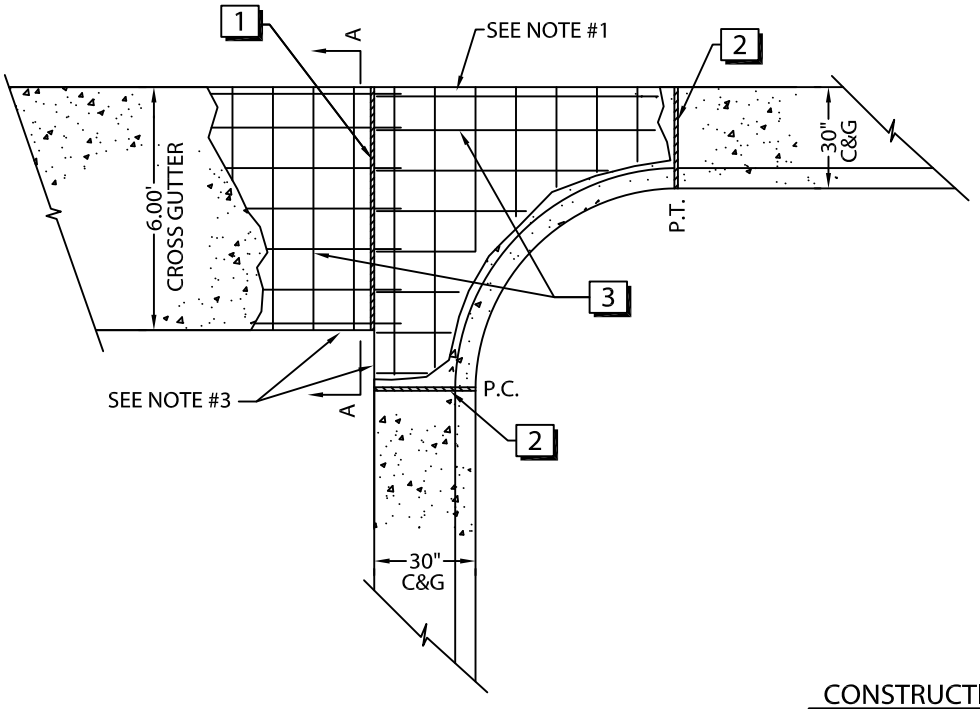

PLAN VIEW

N.T.S.

NOTES:

1. TRANSITION LIP OF CURB THROUGH APRON TO ACHIEVE 1" CROSS GUTTER DEPTH.
2. CROSS GUTTER FLOW LINE GRADE TO BE CONSTANT FROM CURB AND GUTTER ELEVATIONS AT EACH END.
3. ONLY 90° CORNERS WILL BE ALLOWED WHERE ASPHALT CONNECTS TO CROSS GUTTER. CONCRETE APRONS MAY BE REQUIRED.

CONSTRUCTION NOTES:

1. CONTRACTION JOINT SPACED AT 10' MAX. O.C. THRU CROSS GUTTER
2. 1/2" EXPANSION JOINT.
3. #4 BARS @ 12" O.C. BOTH WAYS STANDARD.
4. CLASS A CONCRETE.
5. AGGREGATE BASE.
6. COMPACTED SUBGRADE.

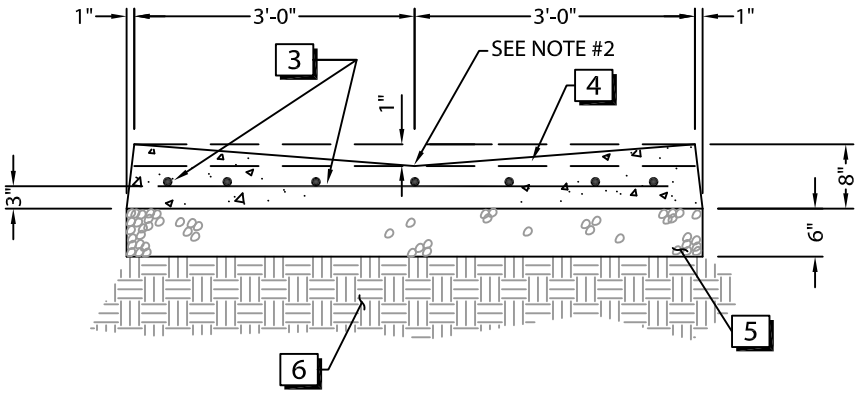

SECTION B-B

N.T.S.

ENOCH CITY
900 EAST MIDVALLEY RD
Enoch, UT 84721
Tel. (435) 586-1119

Copyright © 2019

6'-0" CROSS GUTTER

DETAIL No.: C2

SCALE: N.T.S.

DATE: FEB. 2019

SHEET: 1 of 1

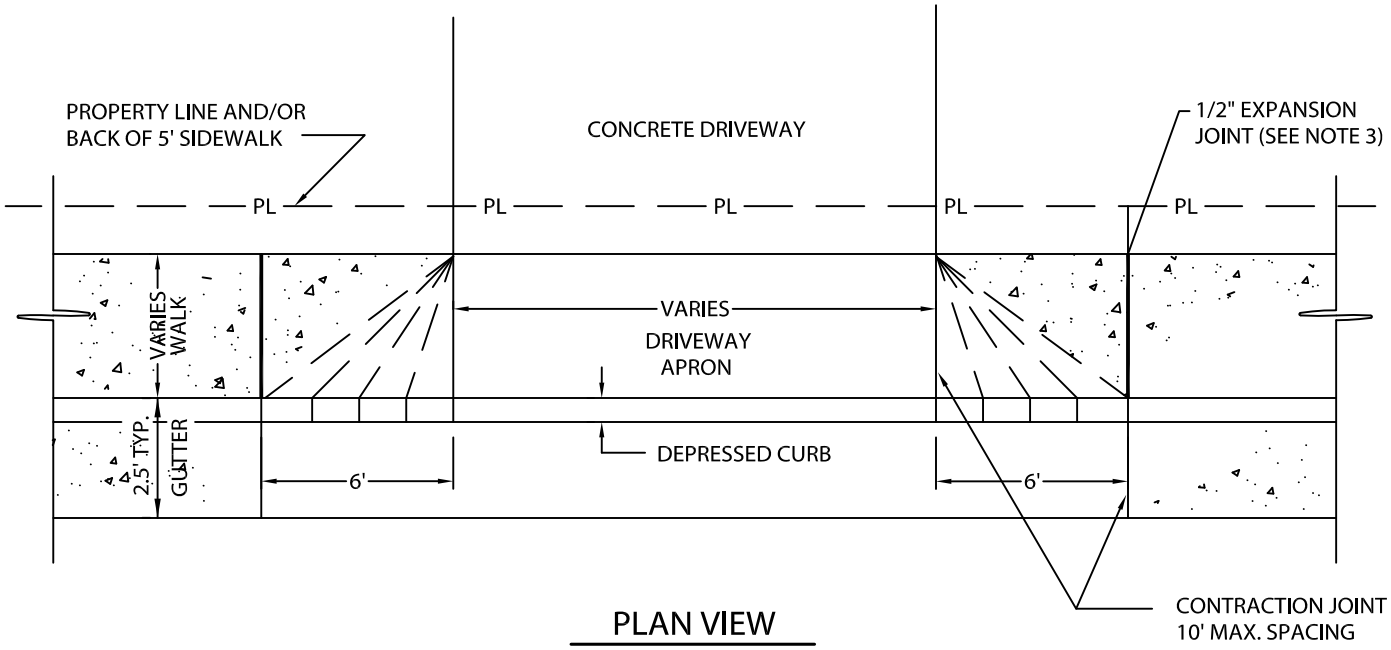

PLAN VIEW

N.T.S.

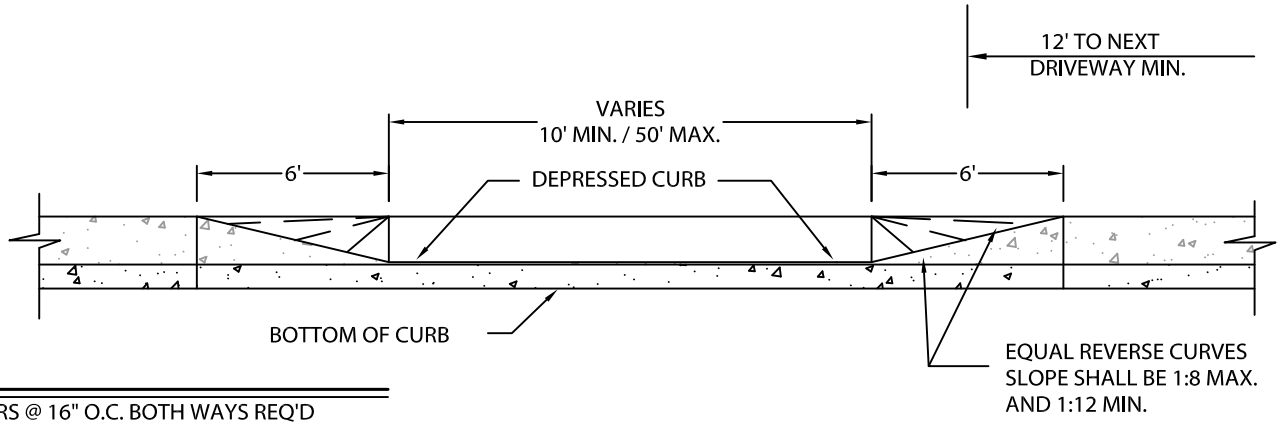

ELEVATION

N.T.S.

NOTES:

1- #4 BARS @ 16" O.C. BOTH WAYS REQ'D ON COMMERCIAL AND INDUSTRIAL DRIVEWAYS

2- DRIVEWAY CUTS IN EXISTING CURBS SHALL BE SAW CUT TO DIMENSIONS SHOWN, BREAKING-OFF OF CURB BACKS WILL NOT BE PERMITTED.

3- 40' EXPANSION JOINT SPACING IN SIDEWALKS TO CONTINUE THROUGH DRIVEWAYS.

4- ALL CONCRETE TO BE CLASS A.

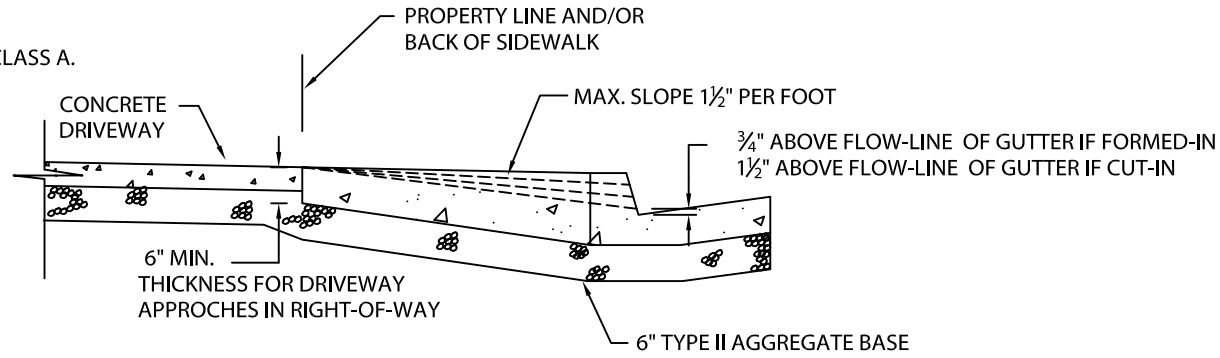

SECTION

N.T.S.

ENOCH CITY
900 EAST MIDVALLEY RD
Enoch, UT 84721
Tel. (435) 586-1119

Copyright © 2019

RESIDENTIAL DRIVEWAYS

SCALE:
N.T.S.

DATE:
FEB. 2019

DETAIL No.:
C3

SHEET:
1 of 1

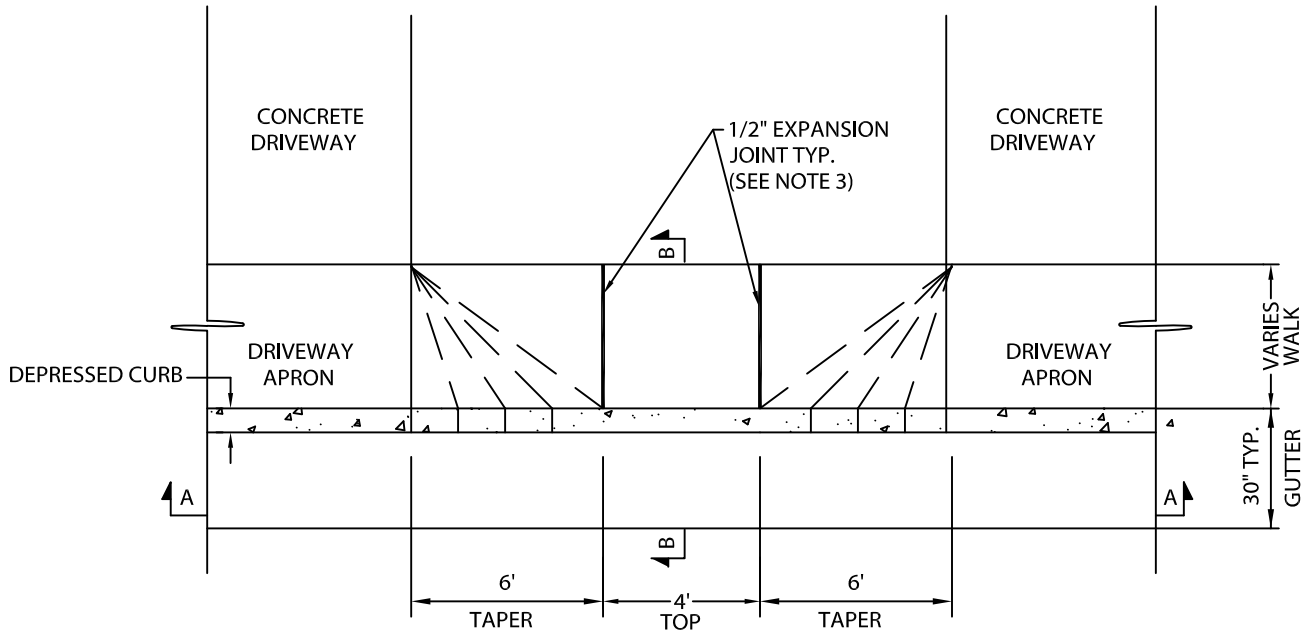

PLAN VIEW

N.T.S.

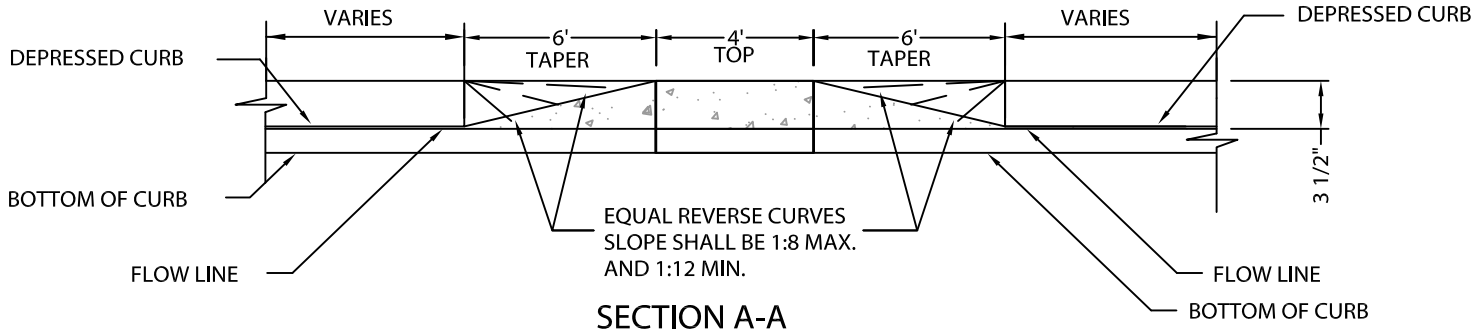

SECTION A-A

N.T.S.

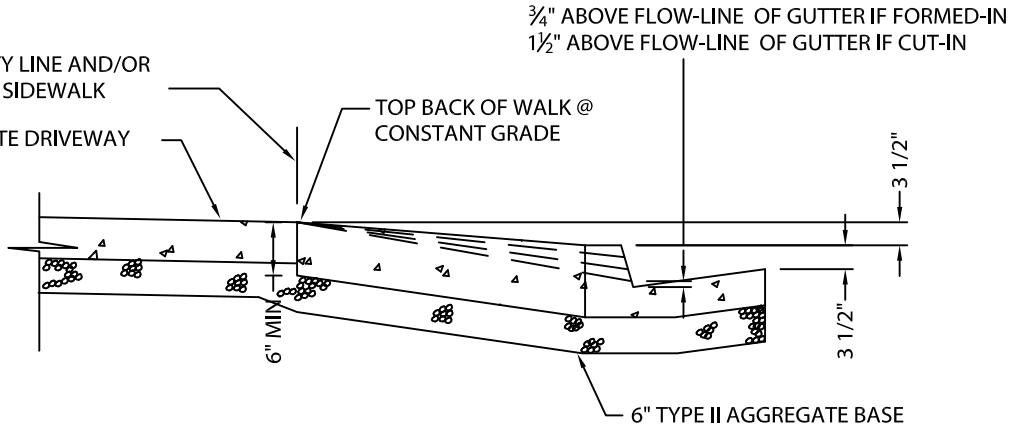

SECTION B-B

N.T.S.

NOTES:

1. #4 BARS @ 16" O.C. BOTH WAYS REQ'D ON COMMERCIAL AND INDUSTRIAL DRIVEWAYS.
2. DRIVEWAY CUTS IN EXISTING CURBS SHALL BE SAW CUT TO DIMENSIONS SHOWN, BREAKING-OFF OF CURB BACKS WILL NOT BE PERMITTED.
3. 40' EXPANSION JOINT SPACING IN SIDEWALKS TO CONTINUE THROUGH DRIVEWAYS.
4. ALL CONCRETE TO BE CLASS A.

ENOCH CITY

ENOCH CITY
900 EAST MIDVALLEY RD
Enoch, UT 84721
Tel. (435) 586-1119

Copyright © 2019

COMMERCIAL & INDUSTRIAL DRIVEWAY BREAK

SCALE:
N.T.S.

DATE:
FEB. 2019

DETAIL No.:
C4

SHEET:
1 of 1

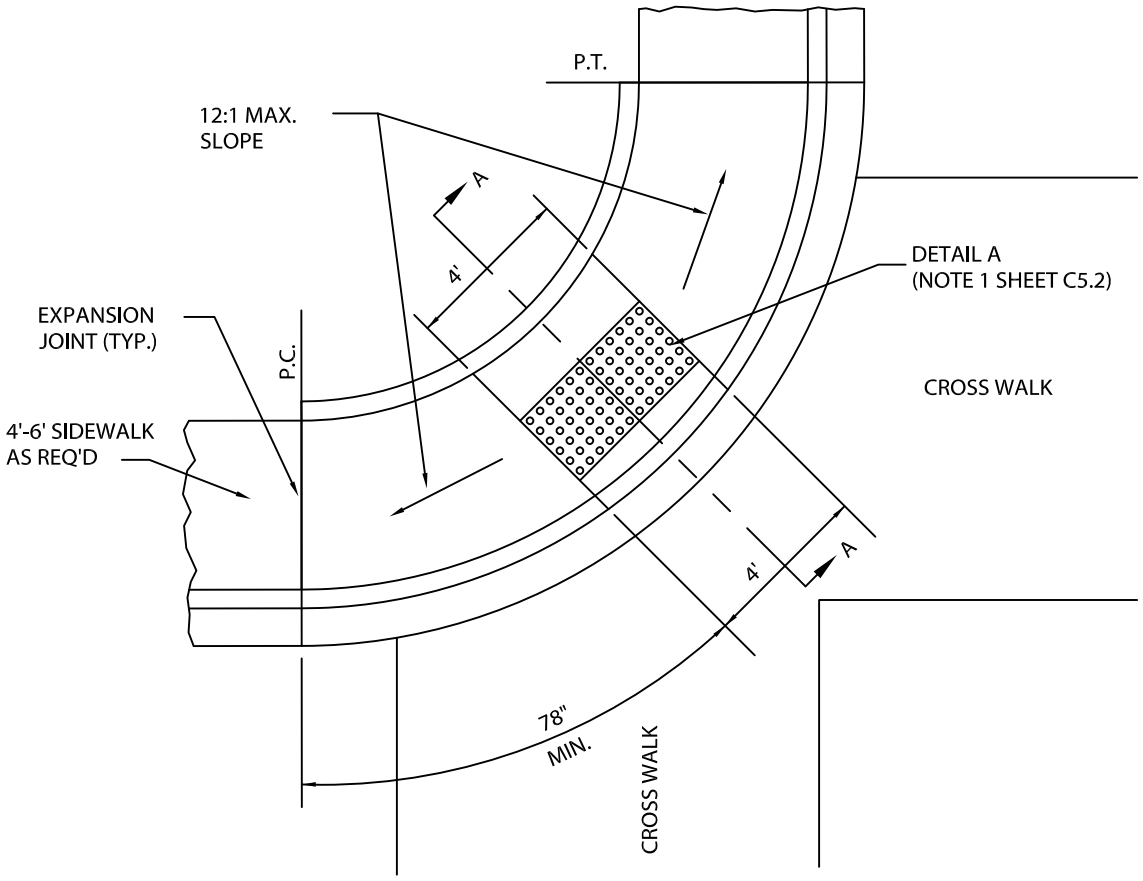

PLAN VIEW

N.T.S.

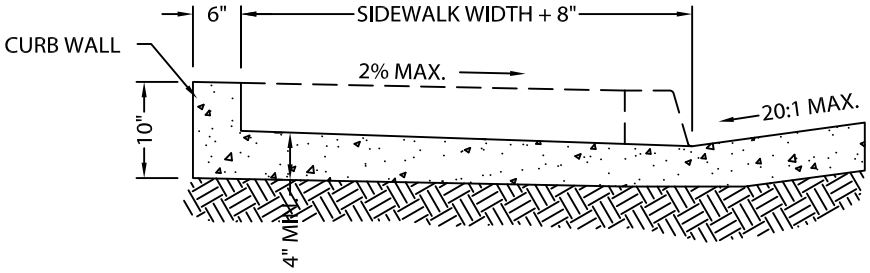

SECTION A-A

N.T.S.

ENOCH CITY
900 EAST MIDVALLEY RD
Enoch, UT 84721
Tel. (435) 586-1119

Copyright © 2019

ACCESSIBLE RAMP

SCALE:
N.T.S.

DATE:
FEB. 2019

DETAIL No.:
C5.1

SHEET:
1 of 2

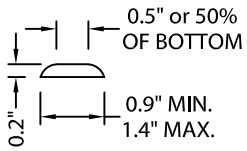

RAISED TRUNCATED DOMES

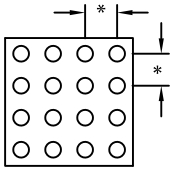

* SPACING
1.6" MIN.
2.4" MAX.

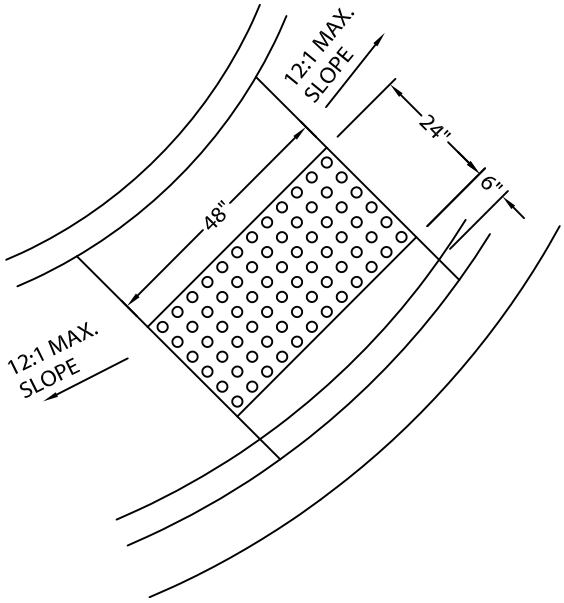

DETAIL A

N.T.S.

NOTES:

1. DETECTABLE WARNING CAST-IN-PLACE SYSTEM WITH TRUNCATED DOMES BY AMOR-TILE O.A.E. 24" x 48" SIZE, BRICK RED COLOR O.A.E.
2. WHEELCHAIR RAMPS SHALL BE LOCATED AT THE MIDPOINT OF CURB RADIUS UNLESS OTHERWISE INDICATED ON PLAN.
3. RAMPS SHALL BE CONSTRUCTED WITH A ROUGH BROOM FINISH TRANSVERSE TO THE SLOPE.
4. ALL CONCRETE TO BE CLASS A.
5. BACK OF WALK AND CURB WALL TO BE 1 INCH ABOVE TOP BACK OF CURB AT P.C. AND P.T.

ENOCH CITY
900 EAST MIDVALLEY RD
Enoch, UT 84721
Tel. (435) 586-1119

Copyright © 2019

ACCESSIBLE RAMP

SCALE:
N.T.S.

DATE:
FEB. 2019

DETAIL No.:
C5.2

SHEET:
1 of 2

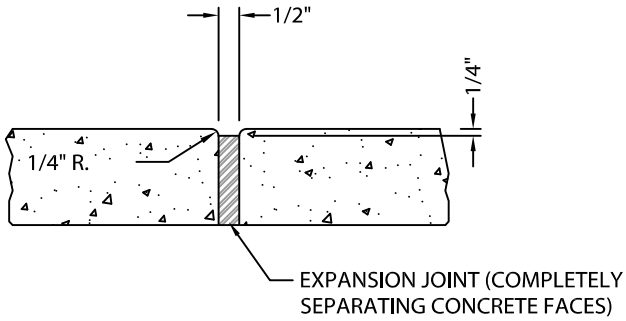

EXPANSION JOINT

N.T.S.

NOTES:

1. ON ALL CURB RETURNS EXPANSION JOINTS SHALL BE PLACED AT P.C. AND P.T. OF THE SIDEWALK.
2. ANY REPLACED SECTIONS OF SIDEWALK SHALL HAVE AN EXPANSION JOINT INSTALLED TO MAINTAIN THE 40' MAX. SPACING.

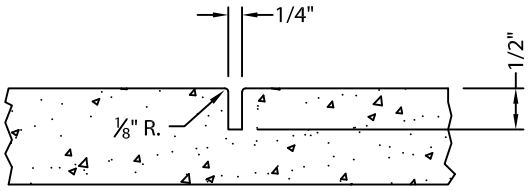

CONNECTION JOINT

N.T.S.

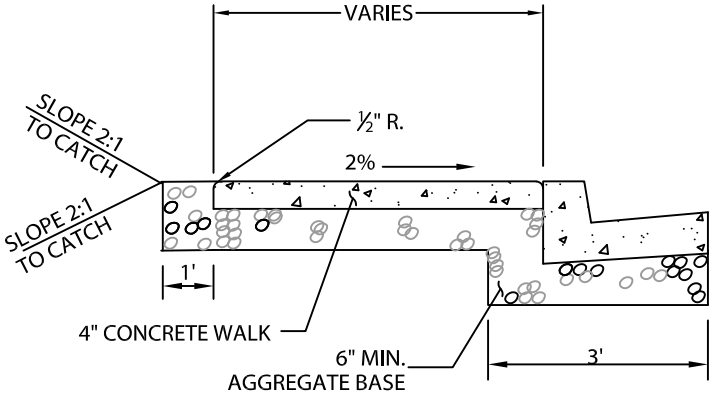

TYPICAL SECTION

N.T.S.

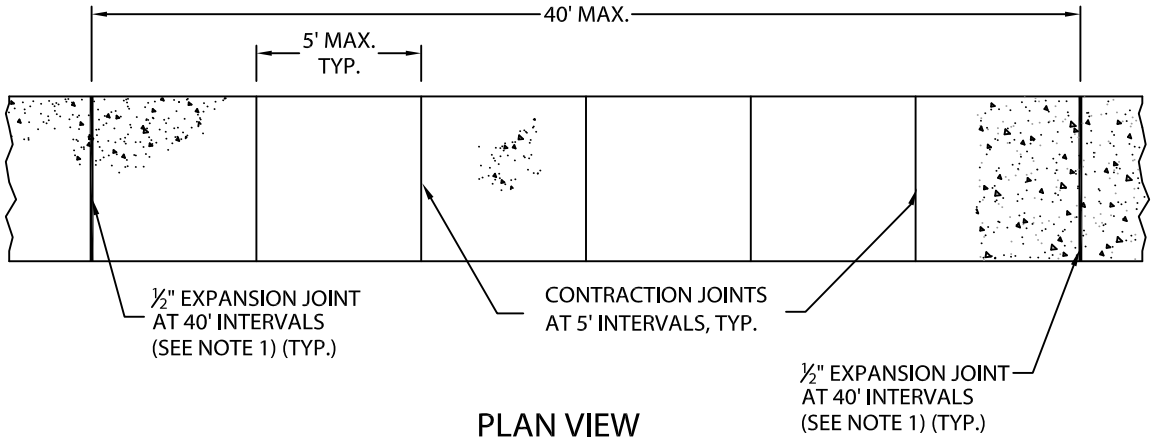

PLAN VIEW

N.T.S.

ENOCH CITY
900 EAST MIDVALLEY RD
Enoch, UT 84721
Tel. (435) 586-1119

Copyright © 2019

CONCRETE SIDEWALK

SCALE: N.T.S.

DATE: FEB. 2019

DETAIL No.: C6.1

SHEET: 1 of 2

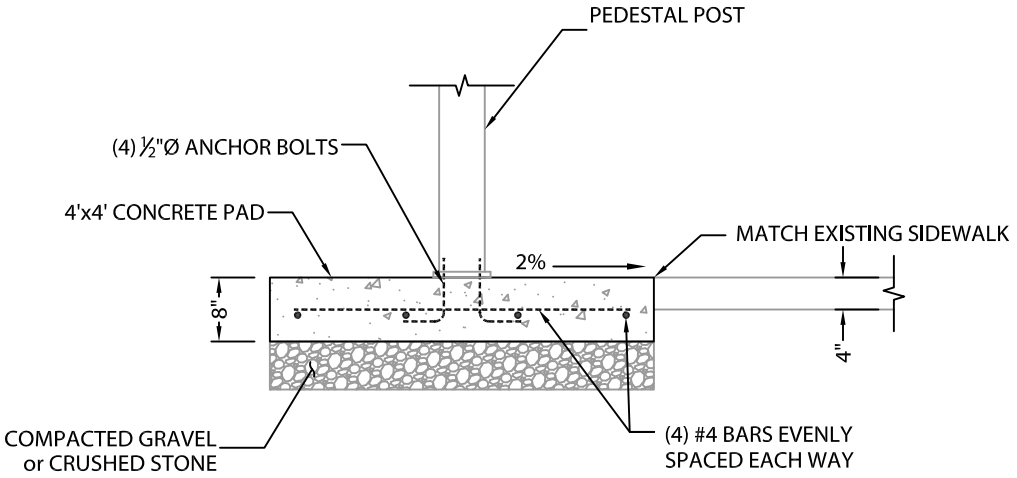

PROFILE VIEW

N.T.S.

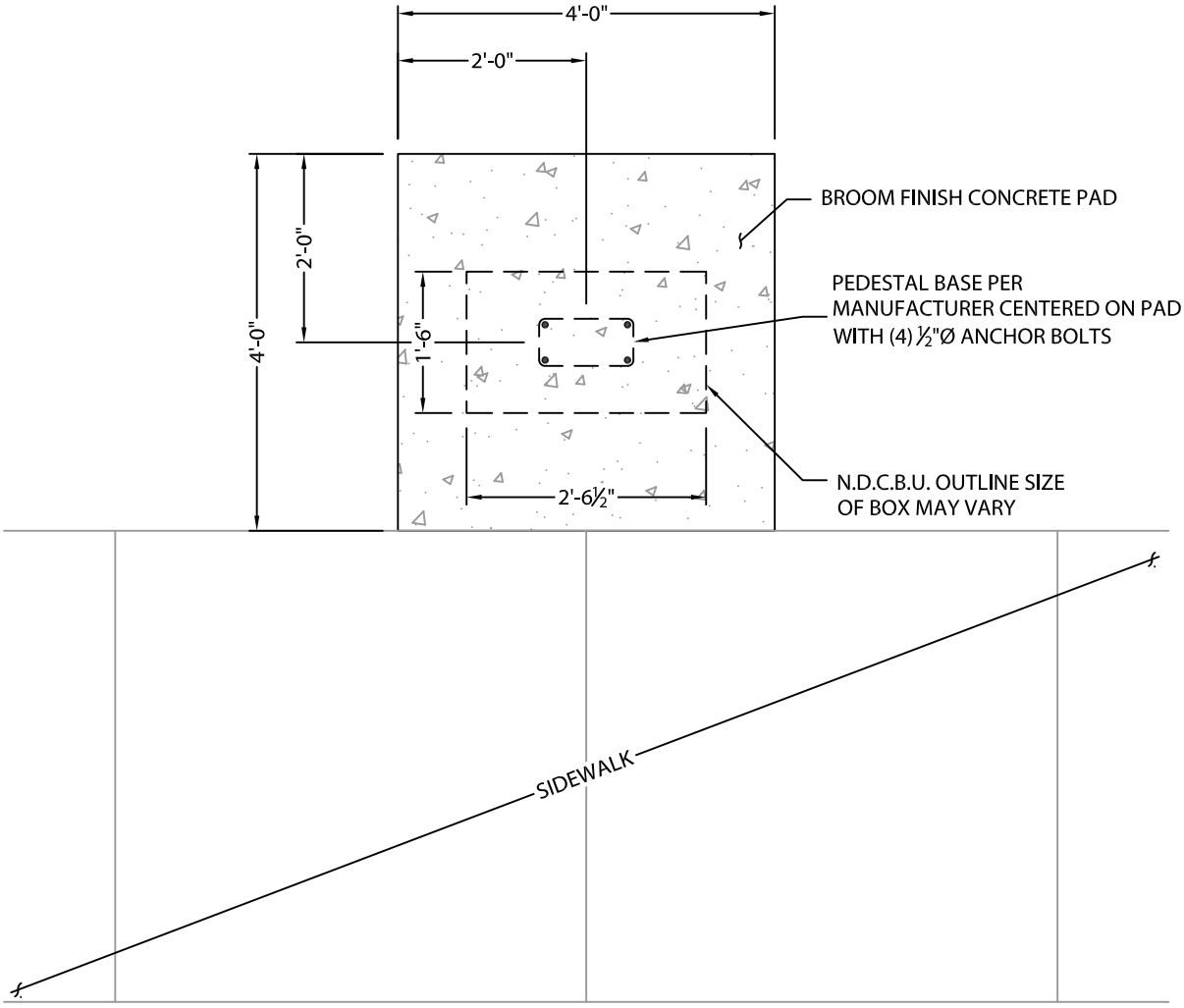

PLAN VIEW

N.T.S.

ENOCH CITY

900 EAST MIDVALLEY RD
Enoch, UT 84721
Tel. (435) 586-1119

Copyright © 2019

CONCRETE PAD FOR MAILBOX DETAIL

SCALE:
N.T.S.

DATE:
FEB. 2019

DETAIL No.:
C6.2

SHEET:
2 of 2

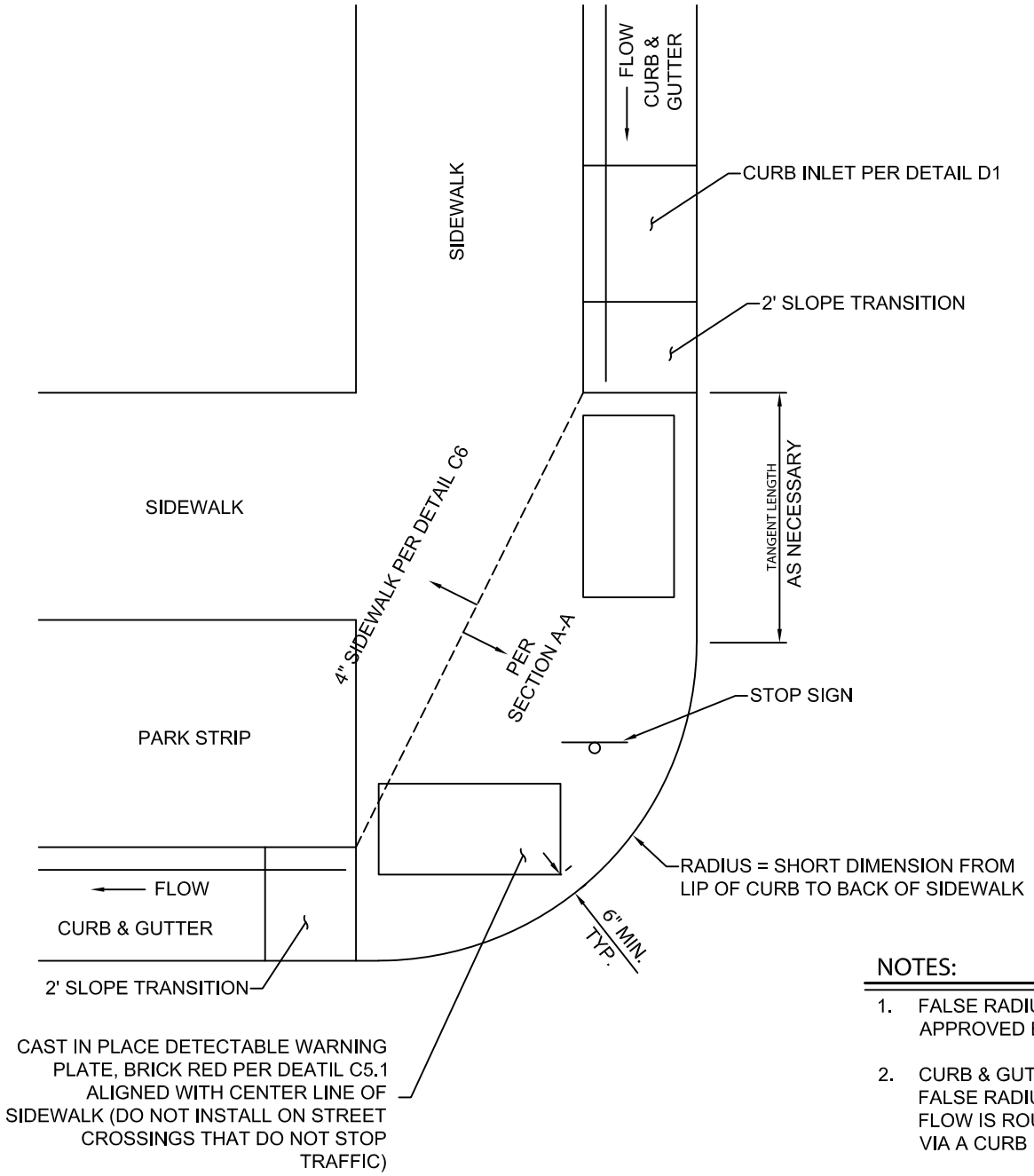

PLAN VIEW

N.T.S.

NOTES:

1. FALSE RADIUS ONLY ALLOWED WHERE APPROVED BY CITY ENGINEER.
2. CURB & GUTTER TO FLOW AWAY FROM FALSE RADIUS UNLESS STORM WATER FLOW IS ROUTED INTO A STORM DRAIN VIA A CURB INLET BOX AS SHOWN.
3. FALSE RADIUS TO BE ADAPTED TO CONDITION IN FIELD AS APPROVED BY CITY ENGINEER.

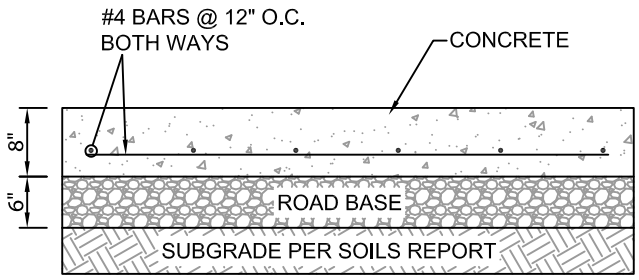

SECTION A-A

N.T.S.

ENOCH CITY
900 EAST MIDVALLEY RD
Enoch, UT 84721
Tel. (435) 586-1119

Copyright © 2019

FALSE RADIUS DETAIL

SCALE:
N.T.S.

DATE:
FEB. 2019

DETAIL No.:
C7

SHEET:
1 of 1

NOTES:

1. WHEN REQUIRED MULTIPLE UNIT ASSEMBLIES SHALL BE INSTALLED WITH A SINGLE CATCH BASIN ENLARGED ACCORDINGLY.
2. CAST IN PLACE BOXES MAY BE USED WHEN APPROVED BY THE CITY ENGINEER.
3. TOP OF INLET BOX GRATE TO BE RECESSED 2" LOWER THAN FLOWLINE OF GUTTER AS SHOWN IN DETAIL BELOW.
4. CONCRETE TROUGH FLOWLINE REQUIRED PER DETAIL D5 ON IN-LINE/FLOW THRU BOXES.
5. BOX & GRATE GRADE TO MATCH GRADE OF CURB AND GUTTER GRADE.
6. GRATE FRAME TO BE SET DIRECTLY ON TOP OF BOX OR TOP OF PRECAST CONCRETE GRADE RING AT THE ELEVATION 2" LOWER THAN FLOWLINE OF THE CURB AND GUTTER PER THE INLET RECESS DETAIL BELOW.

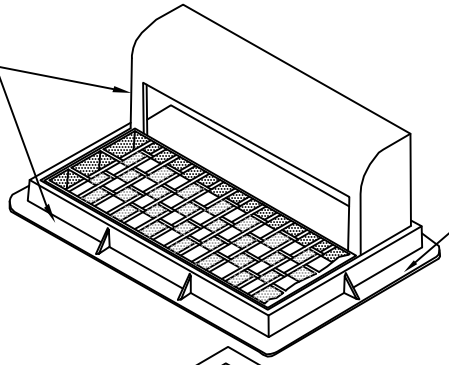

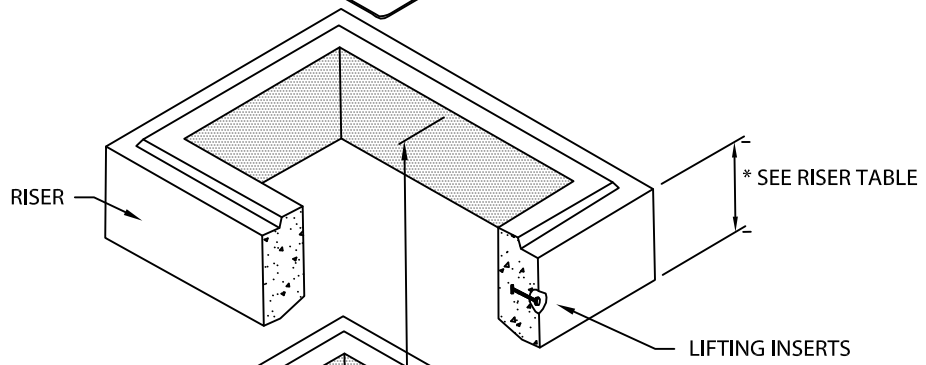

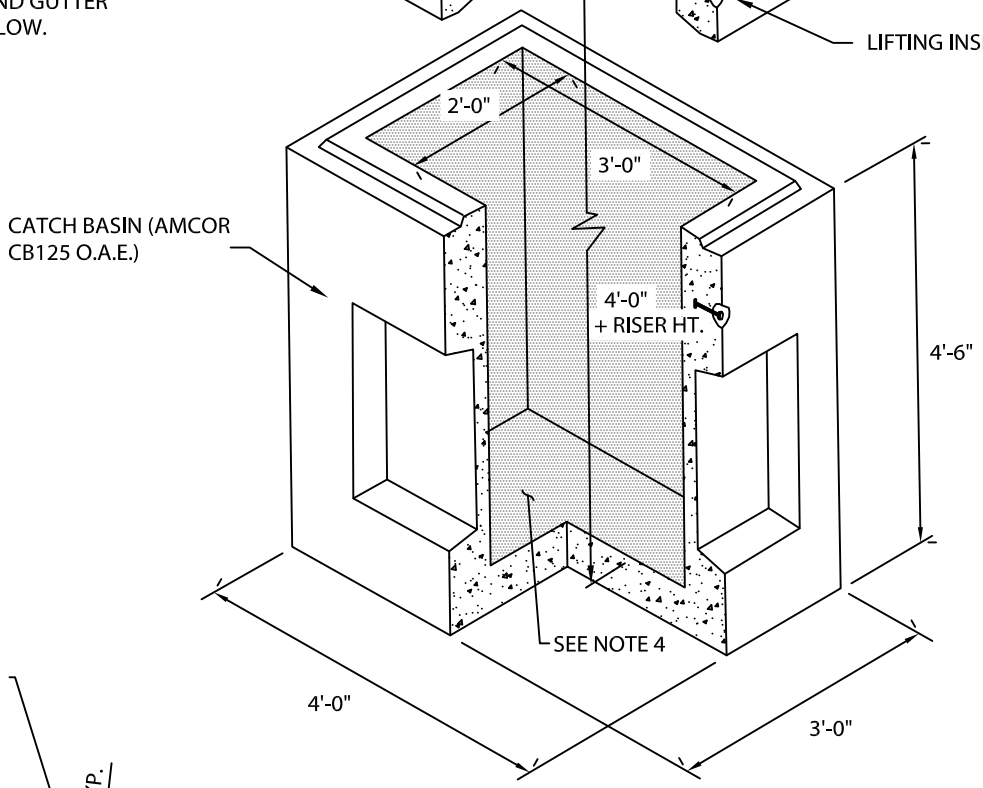

HEIGHT	RISER CODE	WEIGHT
1'	CB231R	930#
2'	CB232R	1860#
3'	CB233R	2790#

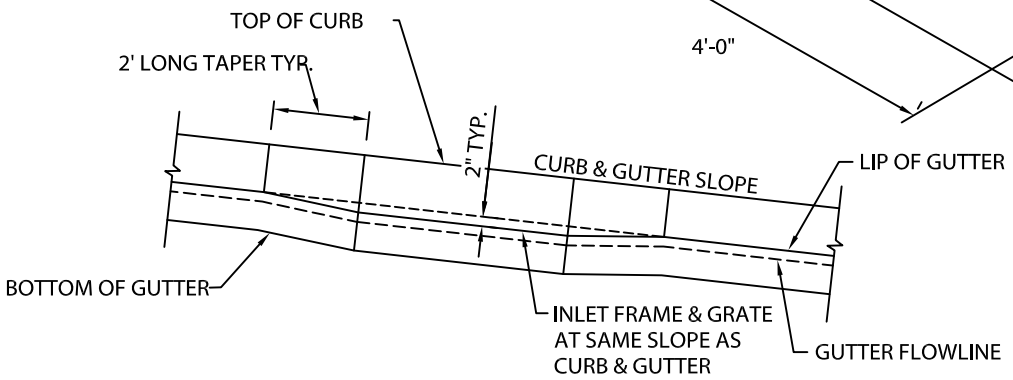

INLET RECESS DETAIL

N.T.S.

ENOCH CITY

900 EAST MIDVALLEY RD
Enoch, UT 84721
Tel. (435) 586-1119

Copyright © 2019

CURB INLET BOX

SCALE: N.T.S.

DATE: FEB. 2019

DETAIL No.: D1

SHEET: 1 of 1

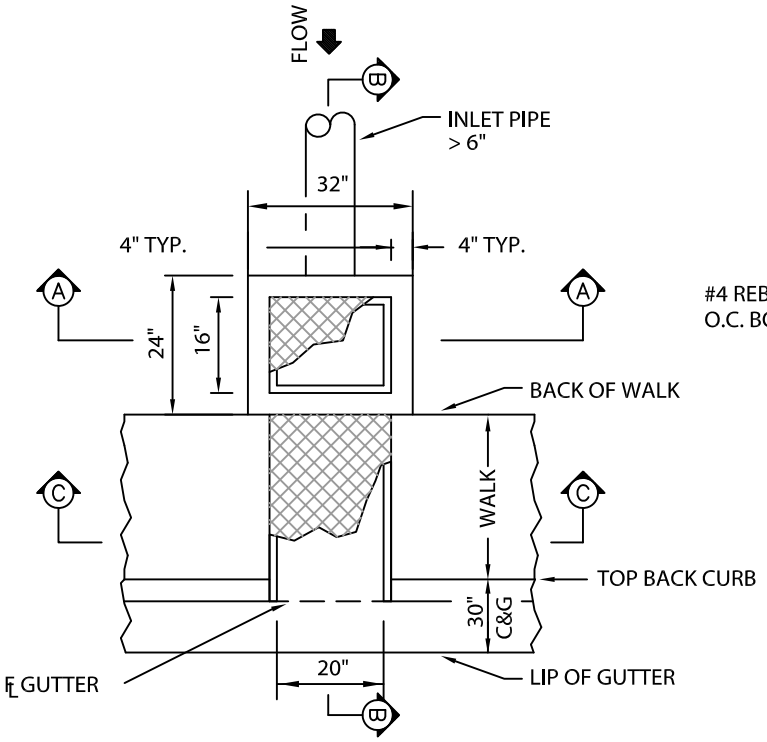

PLAN VIEW

N.T.S.

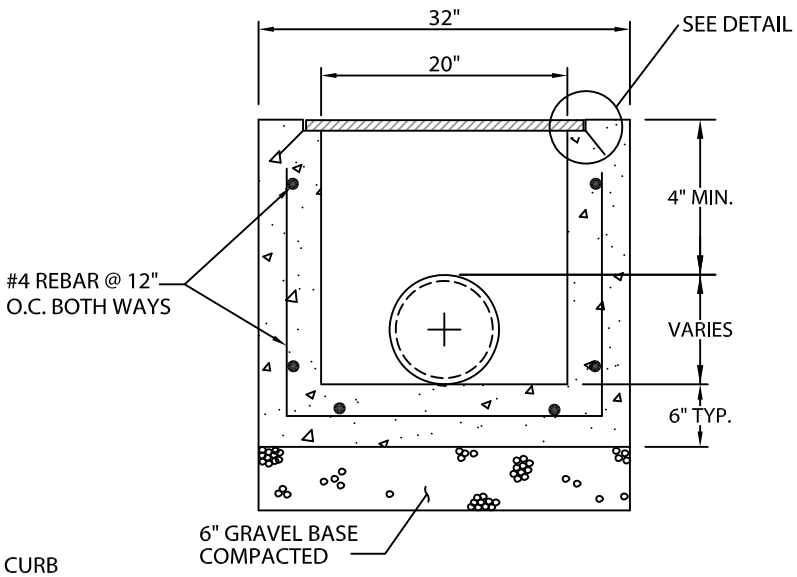

SECTION A-A

N.T.S.

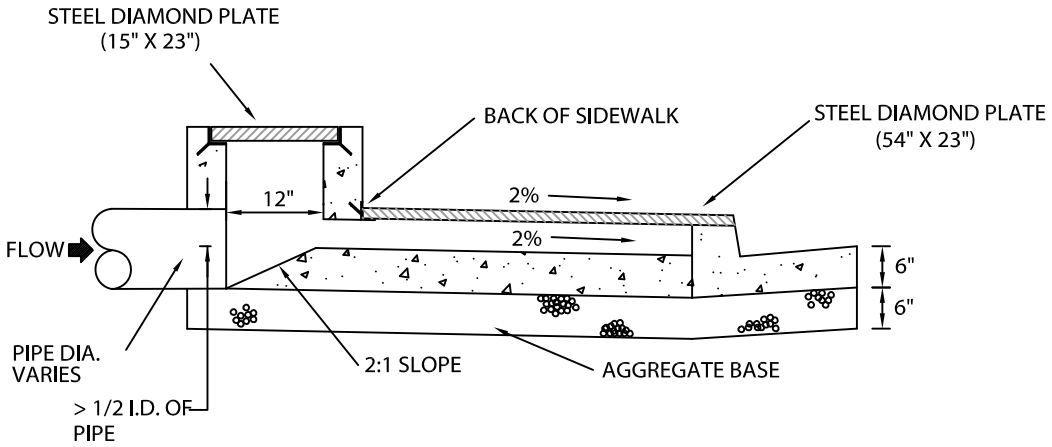

SECTION B-B

N.T.S.

ENOCH CITY
900 EAST MIDVALLEY RD
Enoch, UT 84721
Tel. (435) 586-1119

Copyright © 2019

LARGE CURB OUTLET BOX

SCALE:
N.T.S.

DATE:
FEB. 2019

DETAIL No.:
D2.1

SHEET:
1 of 2

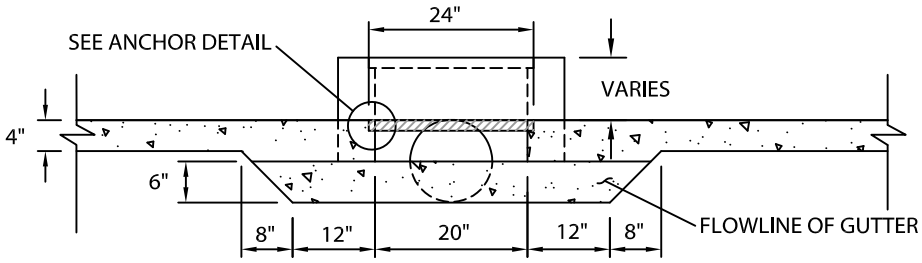

SECTION C-C

N.T.S.

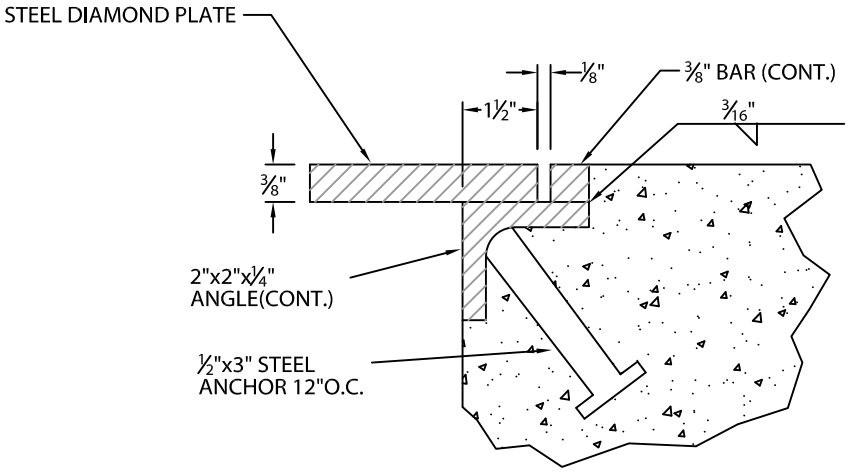

ANCHOR DETAIL

N.T.S.

NOTES:

ALL EXPOSED METAL PARTS SHALL BE A-36 HOT DIPPED GALVANIZED OR PAINTED AND ALL GALVANIZING DAMAGED BY FABRICATION OR INSTALLATION SHALL RECEIVE TWO COATS OF GALVANIZED PAINT (PAINT TO BE RUSTOLEUM GALVANIZING COMPOUND SPRAY OR EQUAL).

ENOCH CITY
900 EAST MIDVALLEY RD
Enoch, UT 84721
Tel. (435) 586-1119

Copyright © 2019

LARGE CURB OUTLET BOX

SCALE:
N.T.S.

DATE:
FEB. 2019

DETAIL No.:
D2.2

SHEET:
2 of 2

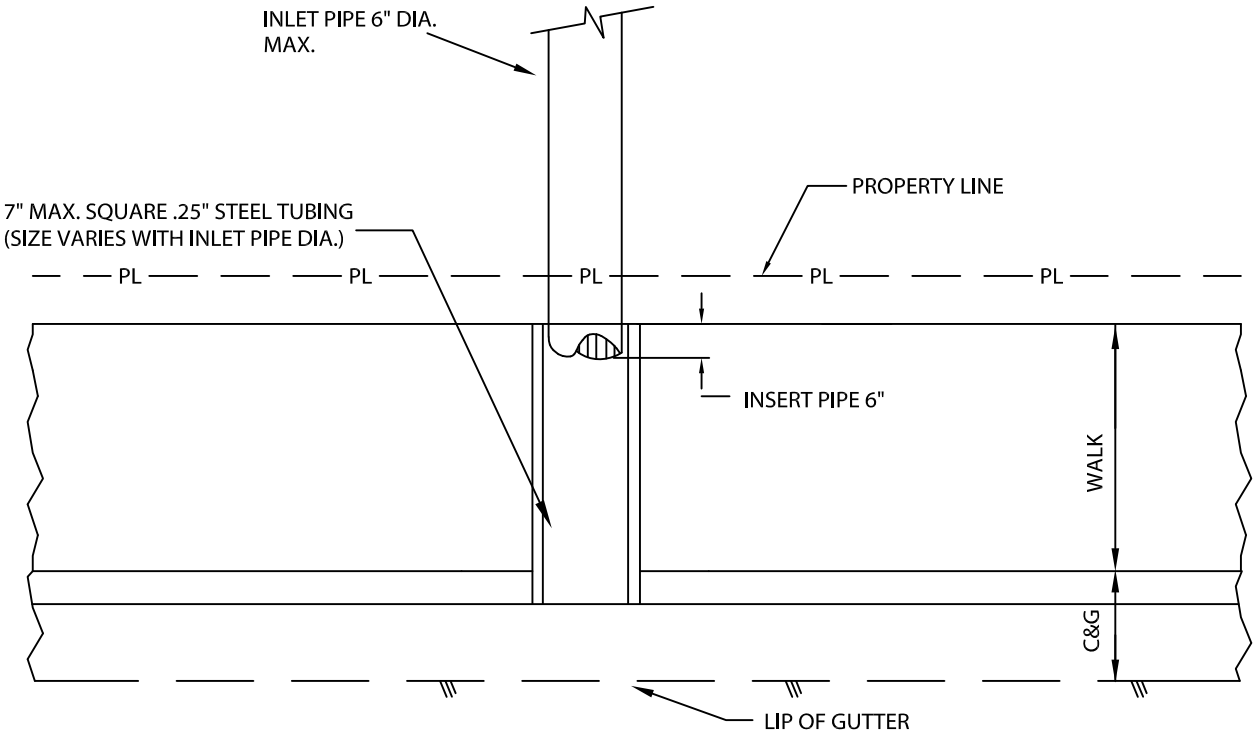

PLAN VIEW

N.T.S.

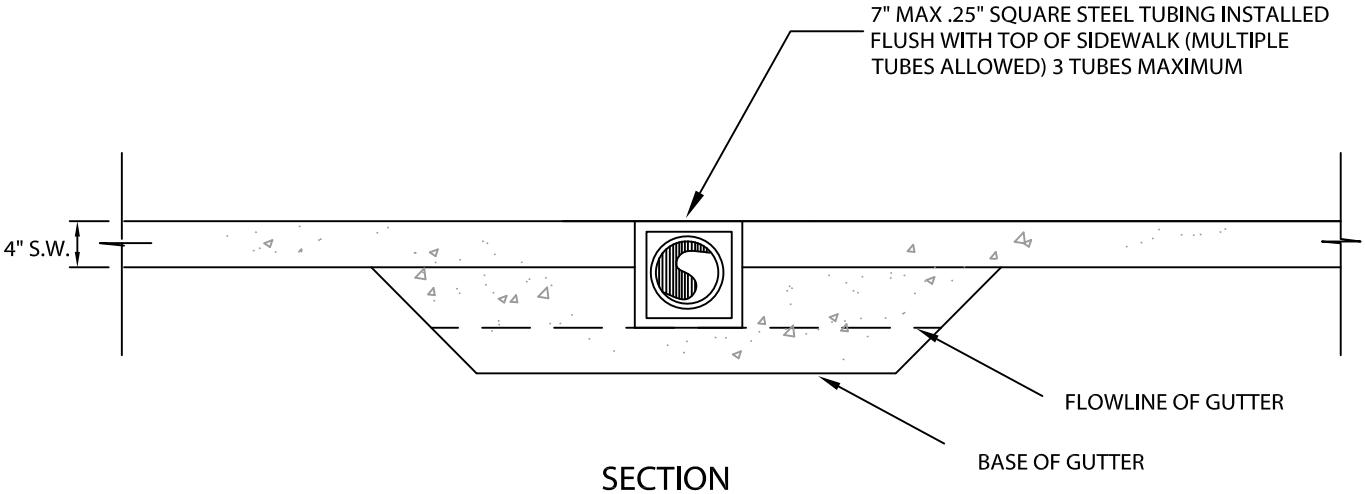

SECTION

N.T.S.

NOTES:

ALL EXPOSED METAL PARTS SHALL BE A-36 HOT DIPPED GALVANIZED OR PAINTED AND ALL GALVANIZING DAMAGED BY FABRICATION OR INSTALLATION SHALL RECEIVE TWO COATS OF GALVANIZED PAINT (PAINT TO BE RUSTOLEUM GALVANZING COMPOUND SPRAY OR EQUAL)

ENOCH CITY

ENOCH CITY
900 EAST MIDVALLEY RD
Enoch, UT 84721
Tel. (435) 586-1119

Copyright © 2019

SMALL CURB OUTLET BOX

SCALE:
N.T.S.

DATE:
FEB. 2019

DETAIL No.:
D3

SHEET:
1 of 1

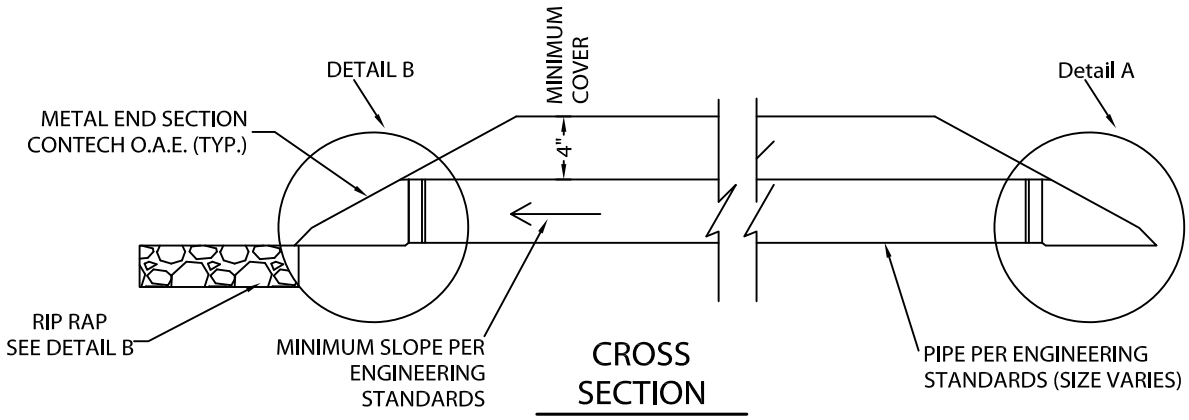

CROSS SECTION

N.T.S.

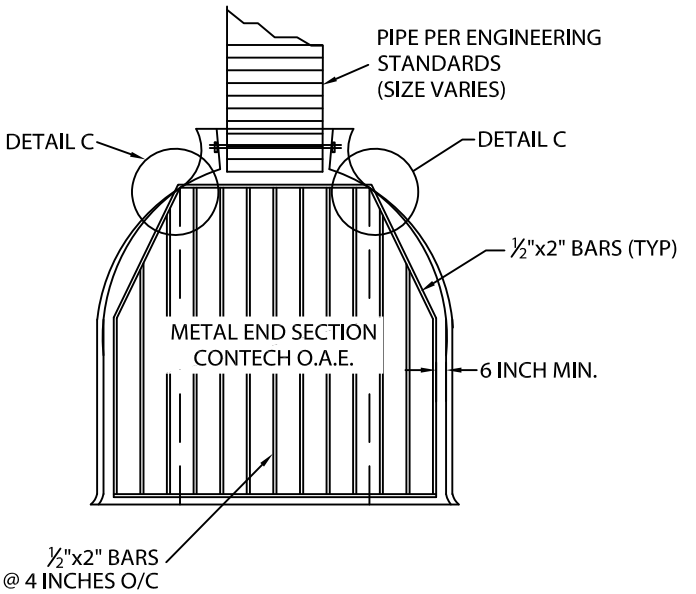

DETAIL A INLET

N.T.S.

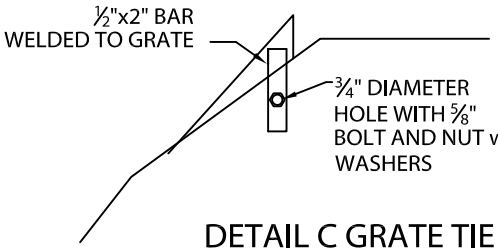

DETAIL C GRATE TIE DOWN

N.T.S.

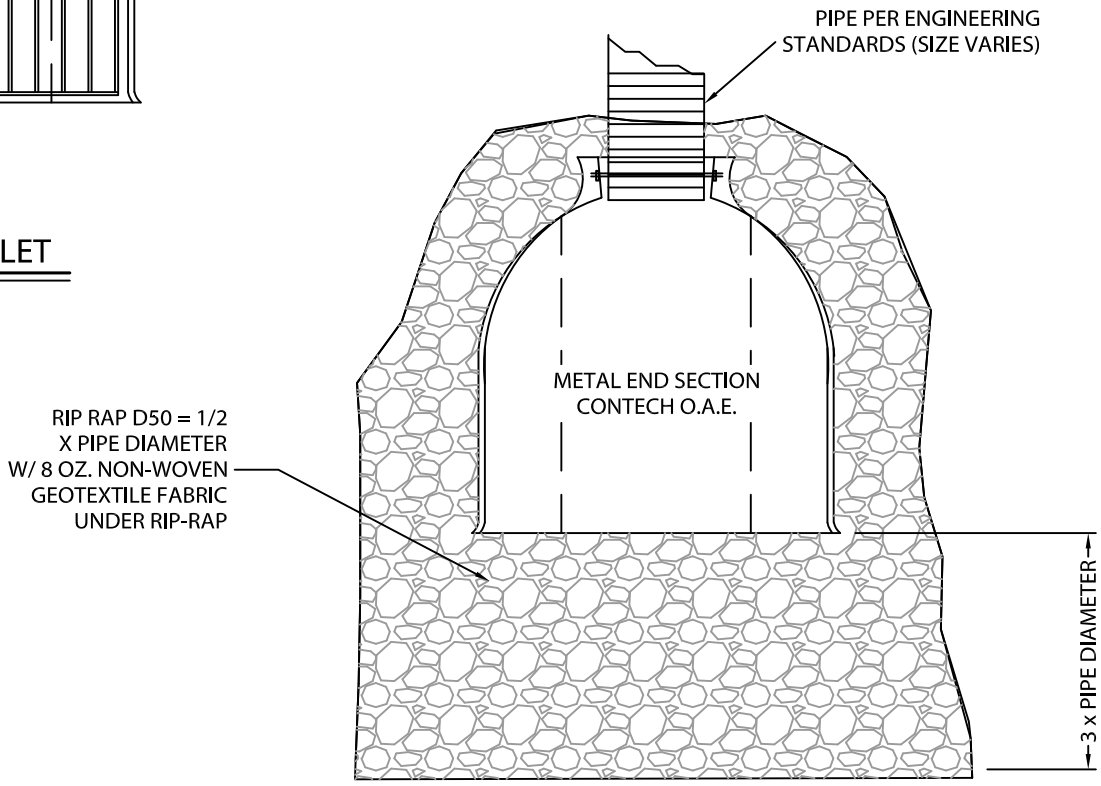

DETAIL B OUTLET

N.T.S.

ENOCH CITY
900 EAST MIDVALLEY RD
Enoch, UT 84721
Tel. (435) 586-1119

Copyright © 2019

STORM DRAIN CULVERT & END SECTIONS

SCALE:
N.T.S.

DATE:
FEB. 2019

DETAIL No.:
D4

SHEET:
1 of 1

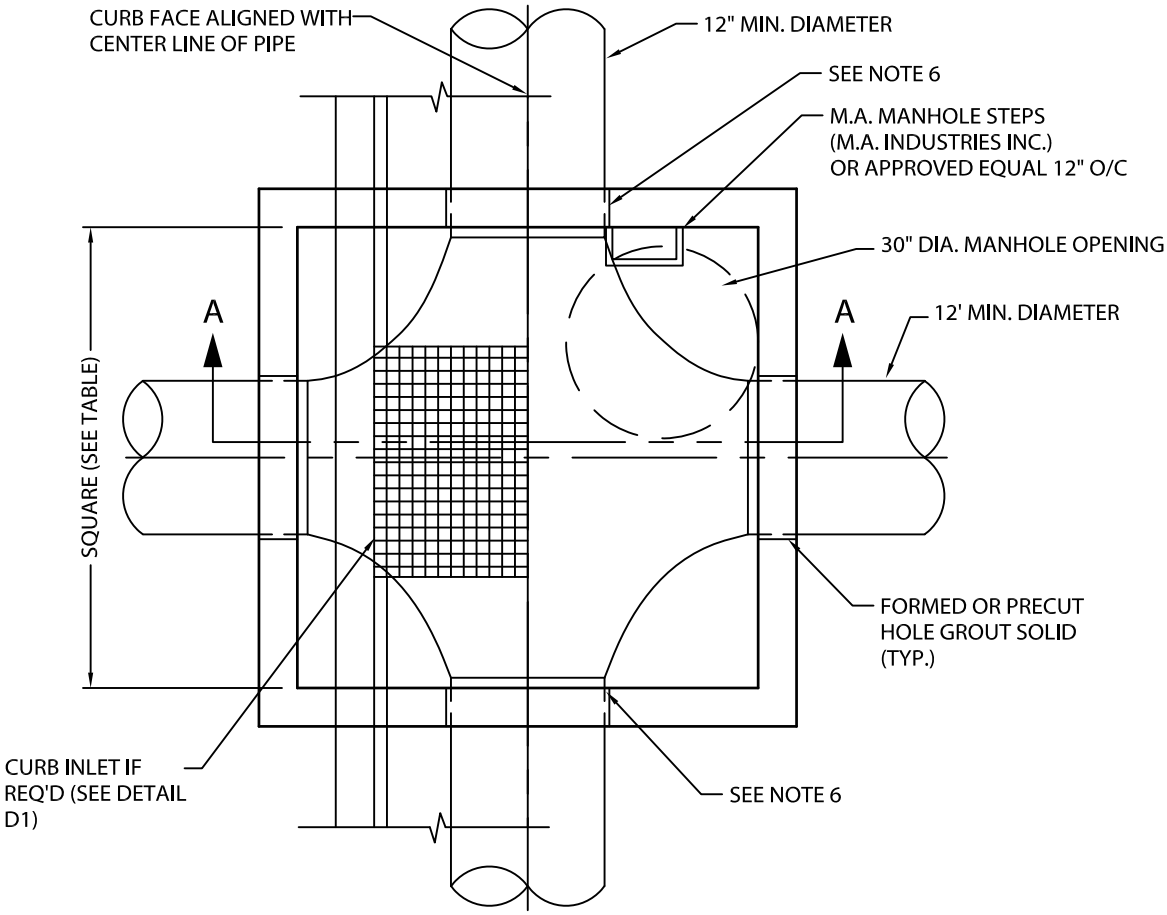

PLAN VIEW

N.T.S.

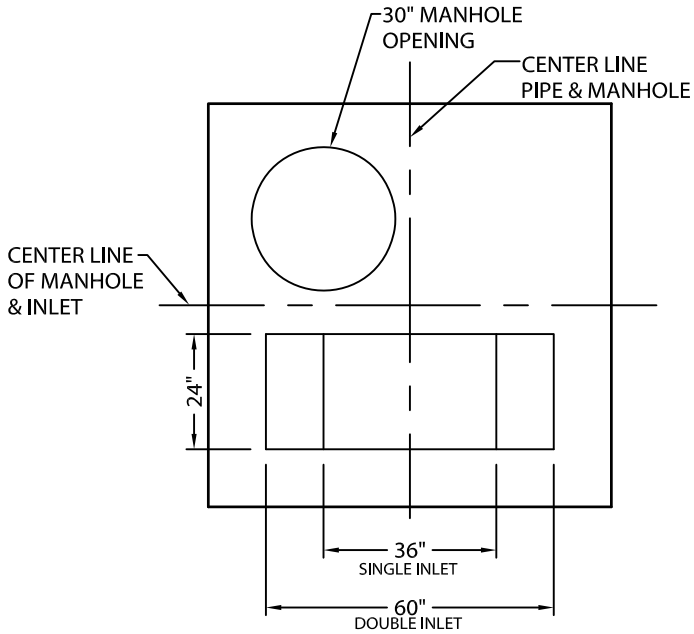

CURB INLET CUT-OUT DETAIL

N.T.S.

ENOCH CITY

900 EAST MIDVALLEY RD
Enoch, UT 84721
Tel. (435) 586-1119

Copyright © 2019

STORM DRAIN MANHOLE

SCALE:
N.T.S.

DATE:
FEB. 2019

DETAIL No.:
D5.1

SHEET:
1 of 2

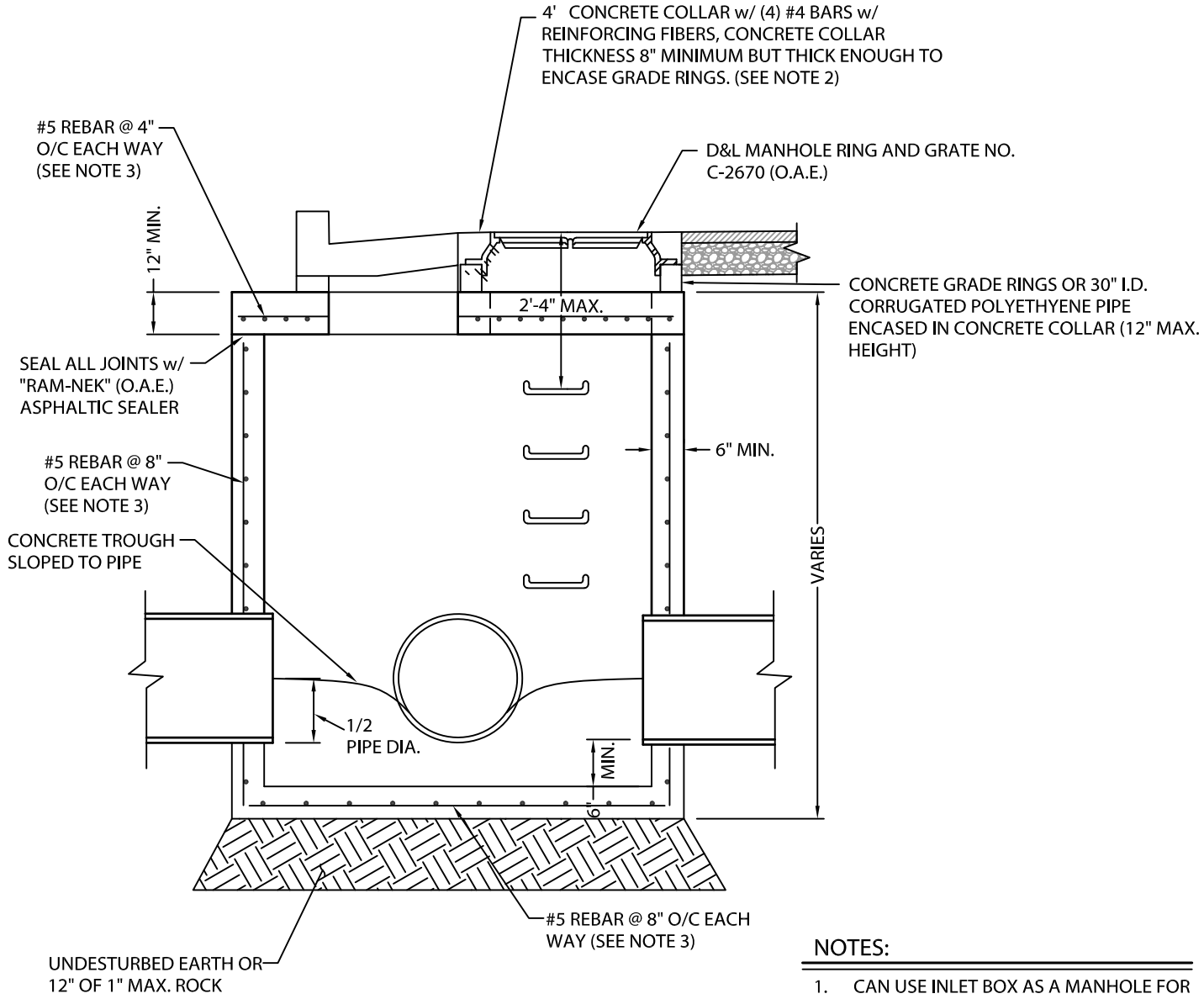

PIPE DIAMETER	MANHOLE I.D. (SQ. INSIDE DIM.)
12"-18"	48"
20"-36"	60"
42"-48"	72"
> 48"	84"

SEE NOTE 1

NOTES:

1. CAN USE INLET BOX AS A MANHOLE FOR 12"-18" PIPE IF PLACED IN CURB PER DETAIL D1.
2. MANHOLES IN ROADWAYS REQUIRE CONC. COLLAR. MANHOLES IN UNIMPROVED AREAS SHALL BE SET 6 TO 12 INCHES ABOVE FINISH GRADE. (NO CONC. COLLAR REQ'D)
3. PRE-CAST MANHOLE TO HAVE H-20 LOAD RATING CERTIFICATION.
4. INSTALL NON-SHRINK GROUT BETWEEN ALL CONCRETE GRADE RINGS AND MANHOLE COVER RING.
5. MANHOLE LID, RING AND CONCRETE COLLAR TO BE CENTERED ON MANHOLE OPENING AND SET 1/4 INCH BELOW TOP OF ASPHALT.
6. MANHOLE INLET PIPE INVERT TO BE 0.20 FT HIGHER THAN OUT PIPE INVERT.

ENOCH CITY
900 EAST MIDVALLEY RD
Enoch, UT 84721
Tel. (435) 586-1119

Copyright © 2019

STORM DRAIN MANHOLE

SCALE: N.T.S.

DATE: FEB. 2019

DETAIL No.: D5.2

SHEET: 2 of 2

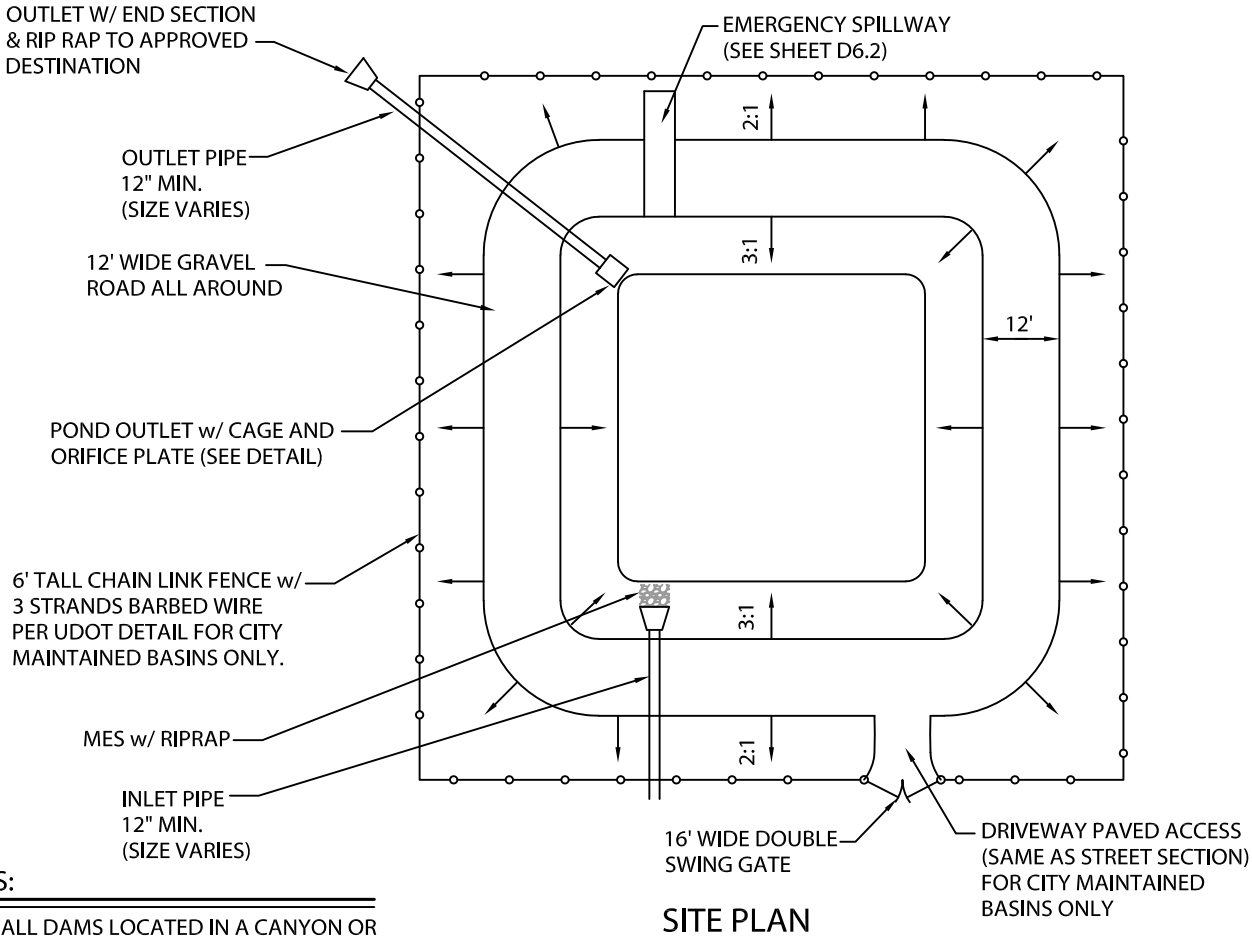

NOTES:

FOR SMALL DAMS LOCATED IN A CANYON OR WATERWAY REFER TO THE DETAILS FROM STATE DAM SAFETY.

SITE PLAN

N.T.S.

MINIMUM AMOUNT OF ACREAGE SERVED BY A DETENTION POND = 160 ACRES

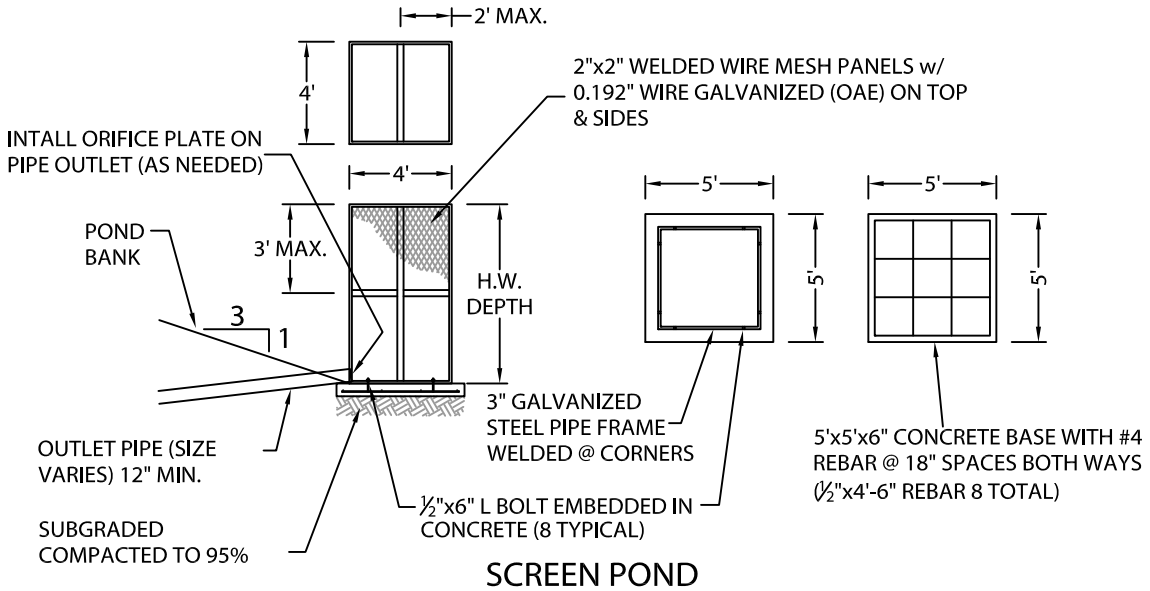

SCREEN POND OUTLET DETAIL

N.T.S.

ENOCH CITY

ENOCH CITY
900 EAST MIDVALLEY RD
Enoch, UT 84721
Tel. (435) 586-1119

Copyright © 2019

DETENTION BASIN

SCALE: N.T.S.

DATE: FEB. 2019

DETAIL No.: D6.1

SHEET: 1 of 2

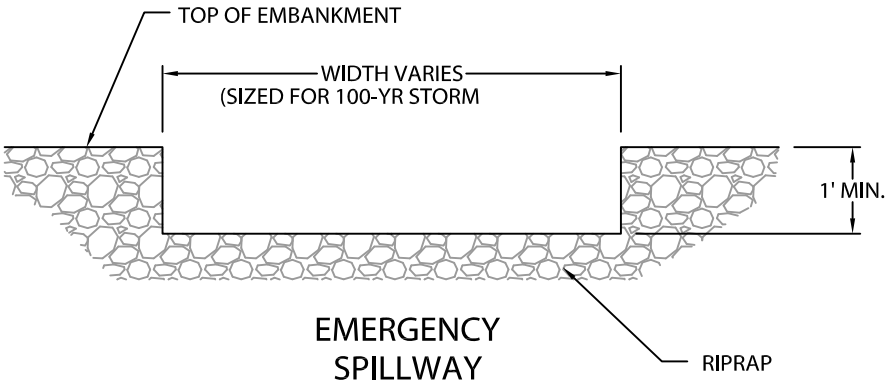

EMERGENCY SPILLWAY

N.T.S.

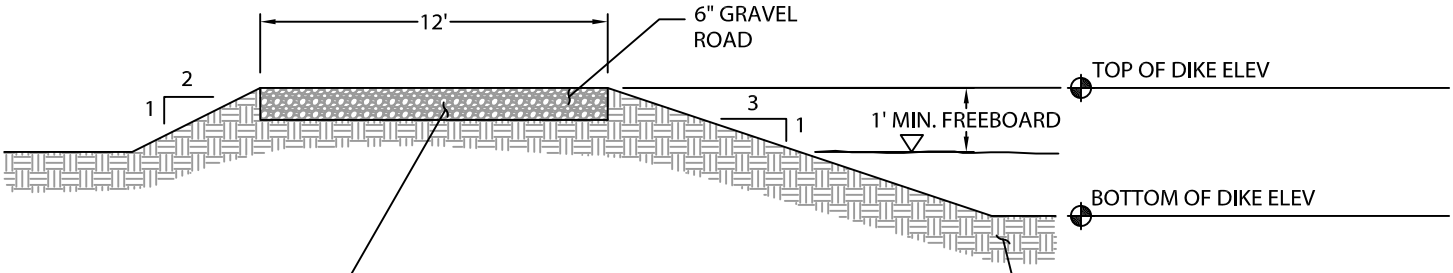

FILL TO BE MOISTURE CONDITIONED AND PLACED IN COMPACTED LIFTS COMPACTED TO 95% OPTIMUM DENSITY PER ASTM D-1557

NOTE:
FILL SHALL BE PLACED IN LOOSE LIFT THICKNESSES WHICH DO NOT EXCEED THE CAPACITY OF THE EQUIPMENT BEING UTILIZED NOT TO EXCEED 8 INCHES. MAXIMUM LIFT THICKNESS SHALL BE REDUCED TO 4 INCHES FOR HAND COMPACTION EQUIPMENT.

OVER EXCAVATE SUB GRADE THEN REPLACE IN PROPERLY MOISTURE CONDITIONED AND COMPACTED LIFTS PER SOILS REPORT

EMBANKMENT SECTION

N.T.S.

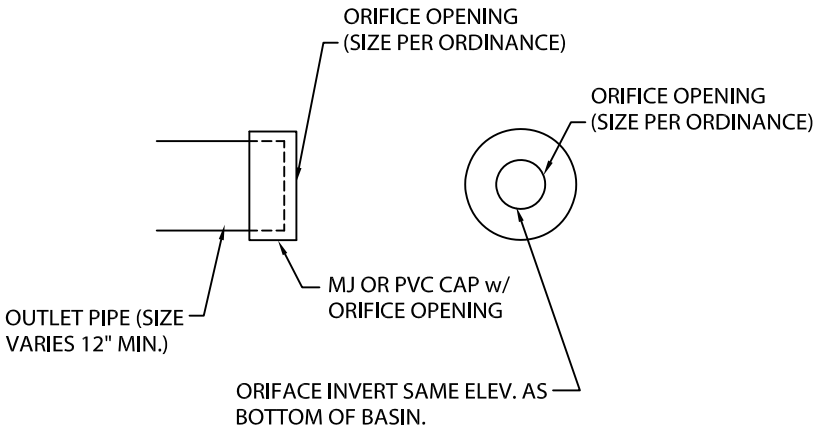

ORIFICE DETAIL

N.T.S.

ENOCH CITY
900 EAST MIDVALLEY RD
Enoch, UT 84721
Tel. (435) 586-1119

Copyright © 2019

DETENTION BASIN

SCALE:
N.T.S.

DATE:
FEB. 2019

DETAIL No.:
D6.2

SHEET:
1 of 2

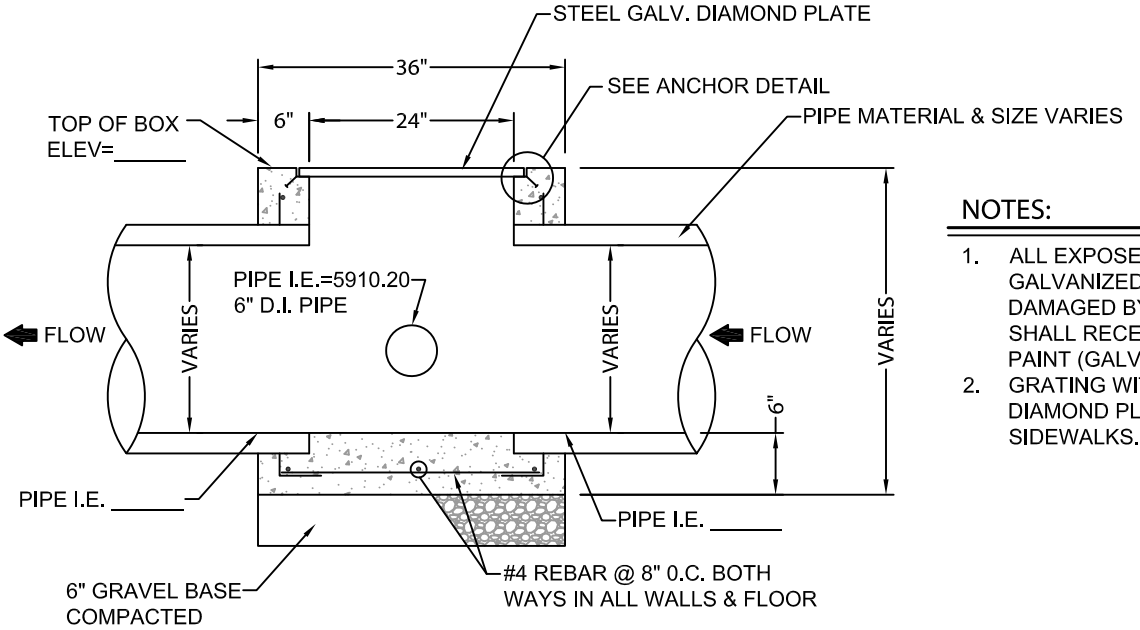

SECTION A-A

N.T.S.

NOTES:

1. ALL EXPOSED METAL PARTS SHALL BE A-36 GALVANIZED STEEL AND ALL GALVANIZING DAMAGED BY FABRICATION OR INSTALLATION SHALL RECEIVE TWO COATS OF ALUMINUM PAINT (GALVONOX OR EQUAL).
2. GRATING WITH 1 3/4" x 3/16" BARS AND DIAMOND PLATE SHALL ONLY BE USED IN SIDEWALKS.

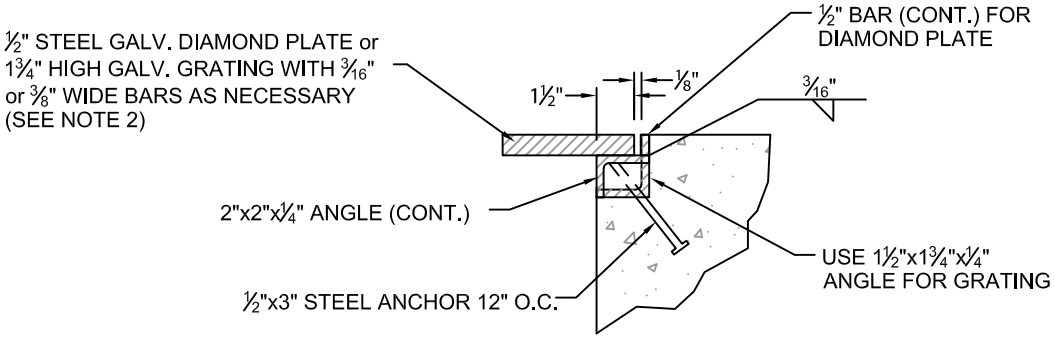

ANCHOR DETAIL

N.T.S.

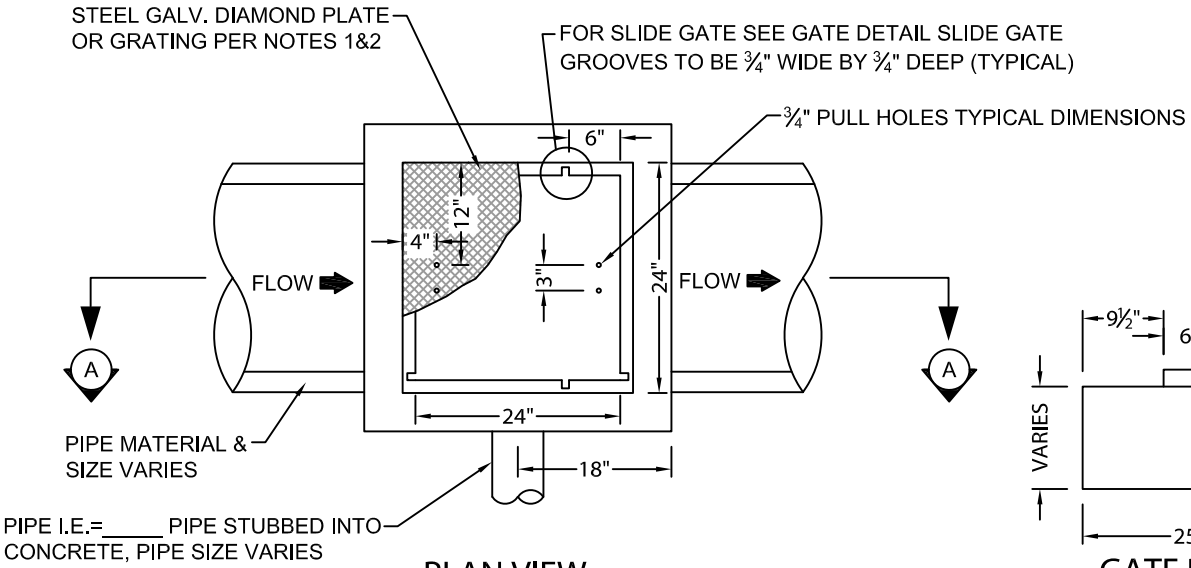

PLAN VIEW

N.T.S.

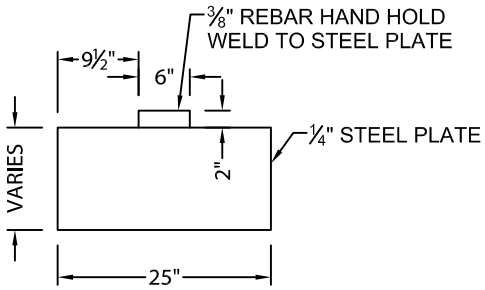

GATE DETAIL

N.T.S.

ENOCH CITY
900 EAST MIDVALLEY RD
Enoch, UT 84721
Tel. (435) 586-1119

Copyright © 2019

IRRIGATION DIVERSION BOX

SCALE: N.T.S.

DATE: FEB. 2019

DETAIL No.: D7

SHEET: 1 of 1

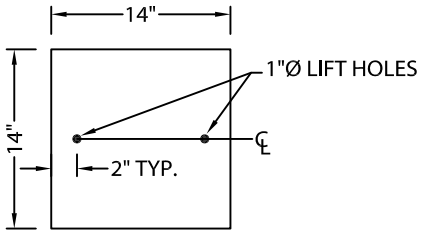

LID DETAIL

N.T.S.

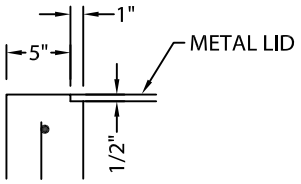

CONCRETE NOTCH

N.T.S.

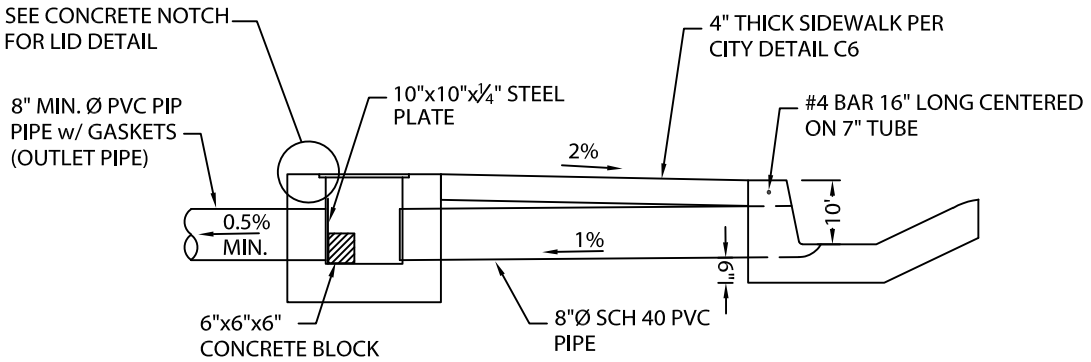

SECTION A-A

N.T.S.

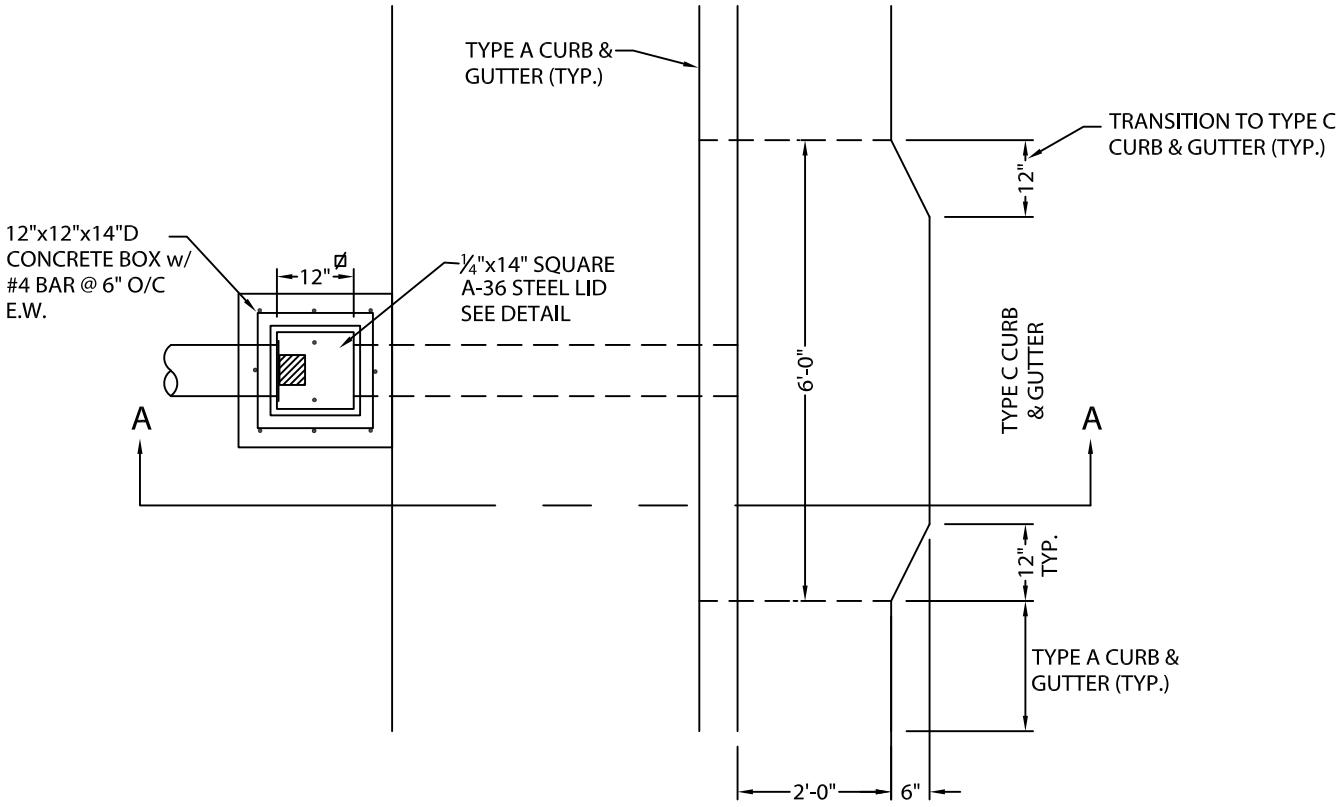

PLAN VIEW

N.T.S.

ENOCH CITY
900 EAST MIDVALLEY RD
Enoch, UT 84721
Tel. (435) 586-1119

SMALL IRRIGATION CULVERT INLET BOX

SCALE: N.T.S.

DATE: FEB. 2019

DETAIL No.: D8

SHEET: 1 of 1

Copyright © 2019

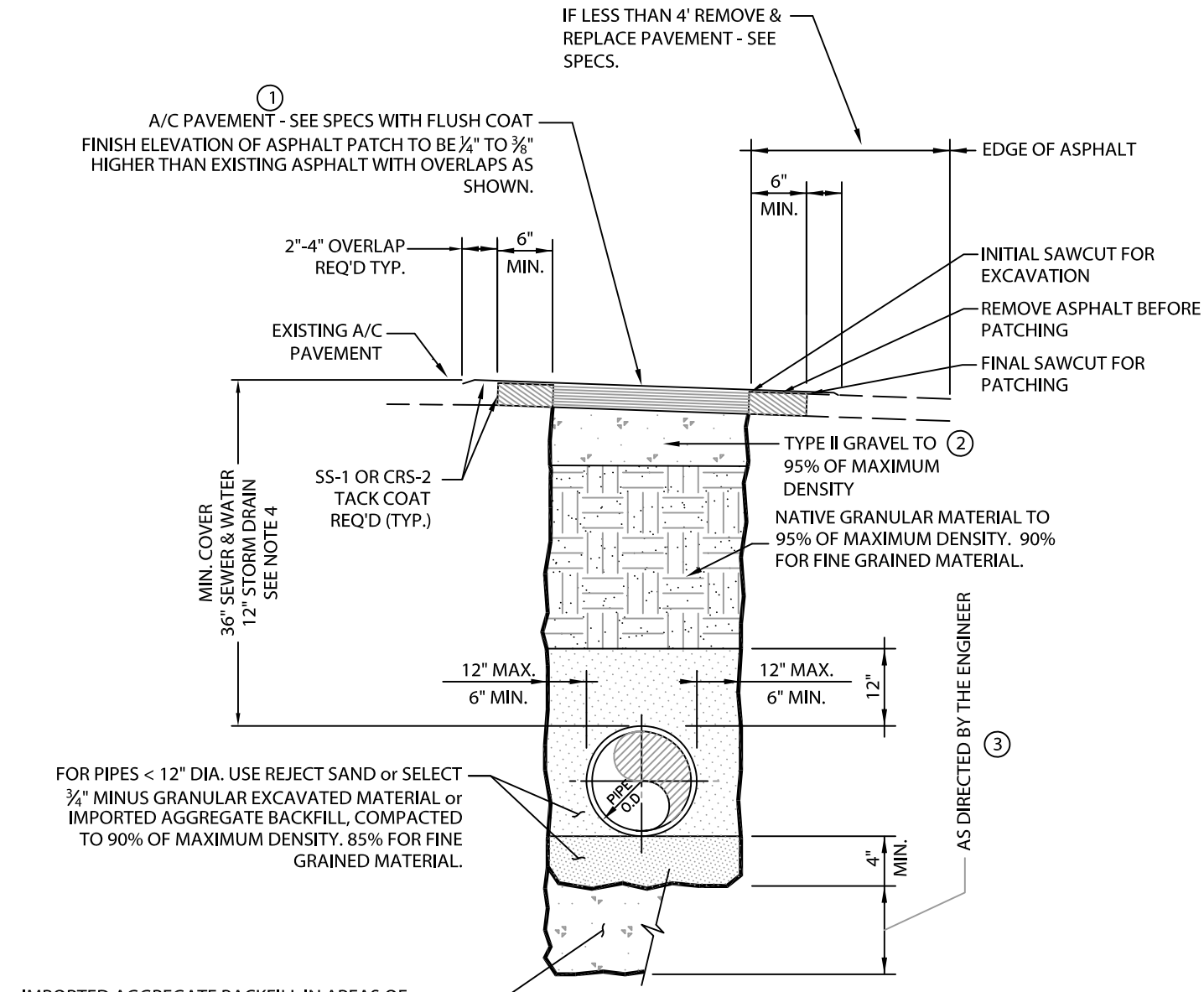

TYPICAL PAVED TRENCH DETAIL

N.T.S.

LEGEND:

- FINAL BACKFILL (MATERIAL AS SHOWN)
- PIPE ZONE
- BEDDING
- FOUNDATION

NOTES:

1. THIS PLATE APPLIES TO THE INSTALLATION OF ALL SERVICE LATERALS. TRENCH WIDTH MINIMUMS DO NOT APPLY TO LATERALS LESS THAN 4".
2. IF PROFILE DRAWING OF THE PIPE IS PROVIDED, THE COVER SHALL BE AS SHOWN ON PROFILE SHEET.
3. TRENCH SIDE SLOPES AND/OR SHORING SHALL COMPLY w/ OSHA STANDARDS.
4. FOR HDPE PIPE WITH LESS THAN 12" COVER USE FLOWABLE FILL TO BOTTOM OF ASPHALT FROM BOTTOM OF PIPE.

ENOCH CITY
900 EAST MIDVALLEY RD
Enoch, UT 84721
Tel. (435) 586-1119

Copyright © 2019

EARTH FILLED TRENCH SECTION

SCALE: N.T.S.

DATE: FEB. 2019

DETAIL No.: R1.1

SHEET: 1 of 2

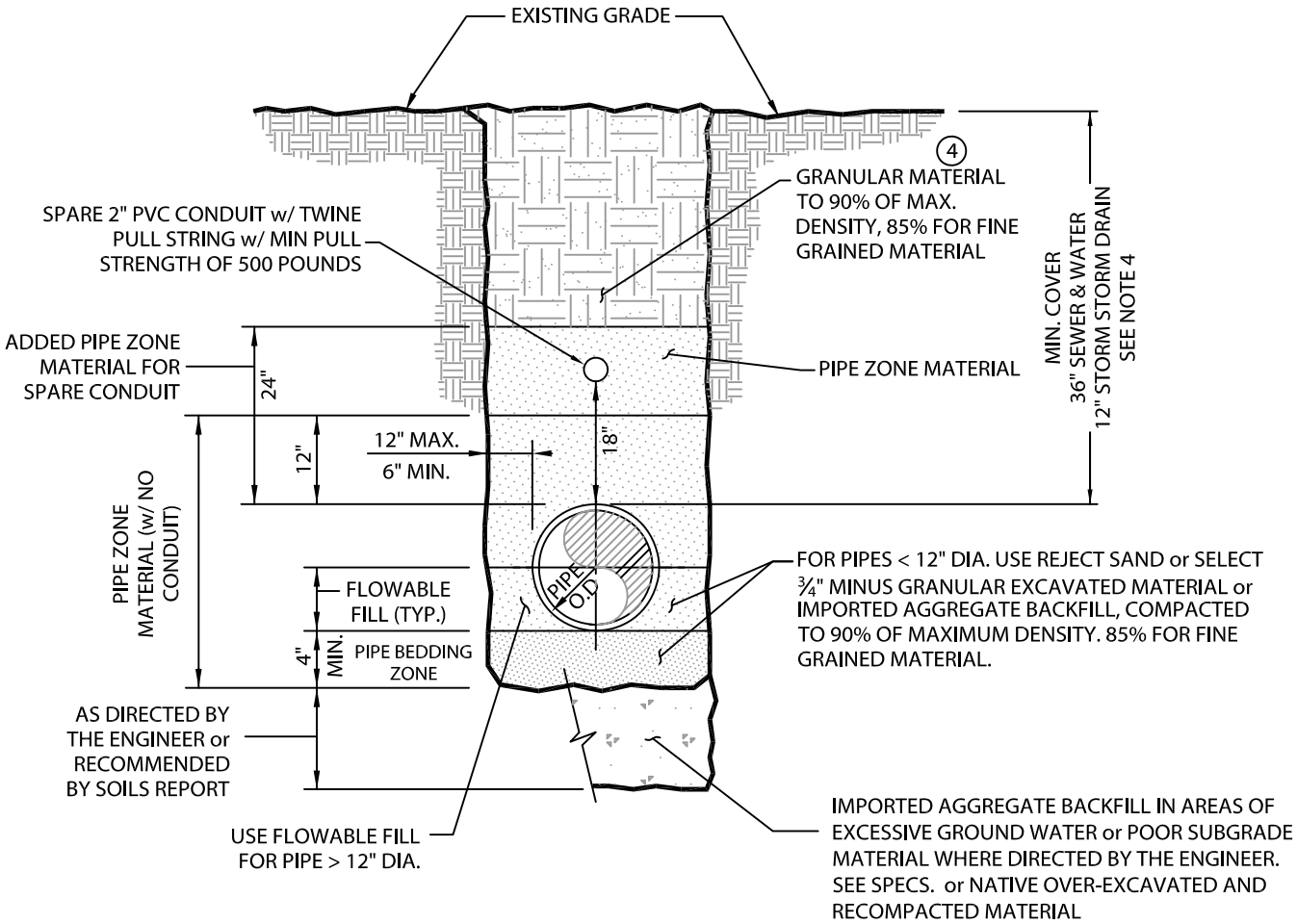

TYPICAL UNPAVED TRENCH DETAIL

N.T.S.

LEGEND:

- FINAL BACKFILL (MATERIAL AS SHOWN)
- PIPE ZONE
- BEDDING
- FOUNDATION

NOTES:

1. THIS PLATE APPLIES TO THE INSTALLATION OF ALL SERVICE LATERALS. TRENCH WIDTH MINIMUMS DO NOT APPLY TO LATERALS LESS THAN 4".
2. IF PROFILE DRAWING OF THE PIPE IS PROVIDED, THE COVER SHALL BE AS SHOWN ON PROFILE SHEET.
3. TRENCH SIDE SLOPES AND/OR SHORING SHALL COMPLY w/ OSHA STANDARDS.
4. FOR HDPE PIPE WITH LESS THAN 12" COVER USE FLOWABLE FILL TO BOTTOM OF ASPHALT FROM BOTTOM OF PIPE.

ENOCH CITY
900 EAST MIDVALLEY RD
Enoch, UT 84721
Tel. (435) 586-1119

Copyright © 2019

EARTH FILLED TRENCH SECTION

SCALE: N.T.S.

DATE: FEB. 2019

DETAIL No.: R1.2

SHEET: 2 of 2

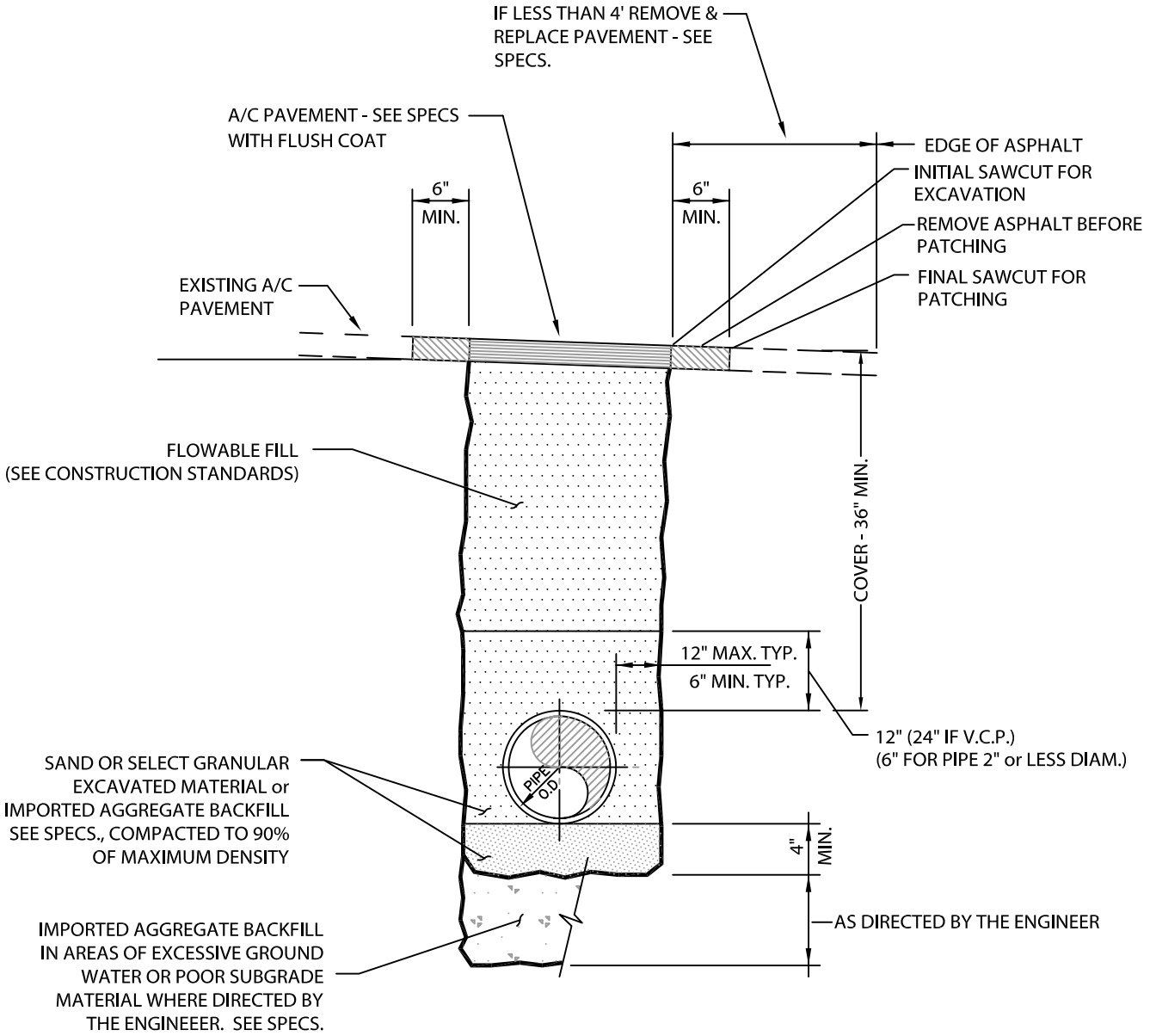

NOTES:

1. TRENCH WIDTH, BEDDING, AND PIPE ZONE REQUIREMENTS FOR UTILITY INSTALLATIONS SHALL CONFORM TO THE RESPECTIVE AGENCY REQUIREMENTS.

TYPICAL TRENCH DETAIL

N.T.S.

ENOCH CITY
900 EAST MIDVALLEY RD
Enoch, UT 84721
Tel. (435) 586-1119

Copyright © 2019

SLURRY FILLED TRENCH SECTION

SCALE: N.T.S.

DATE: FEB. 2019

DETAIL No.: R2

SHEET: 1 of 1

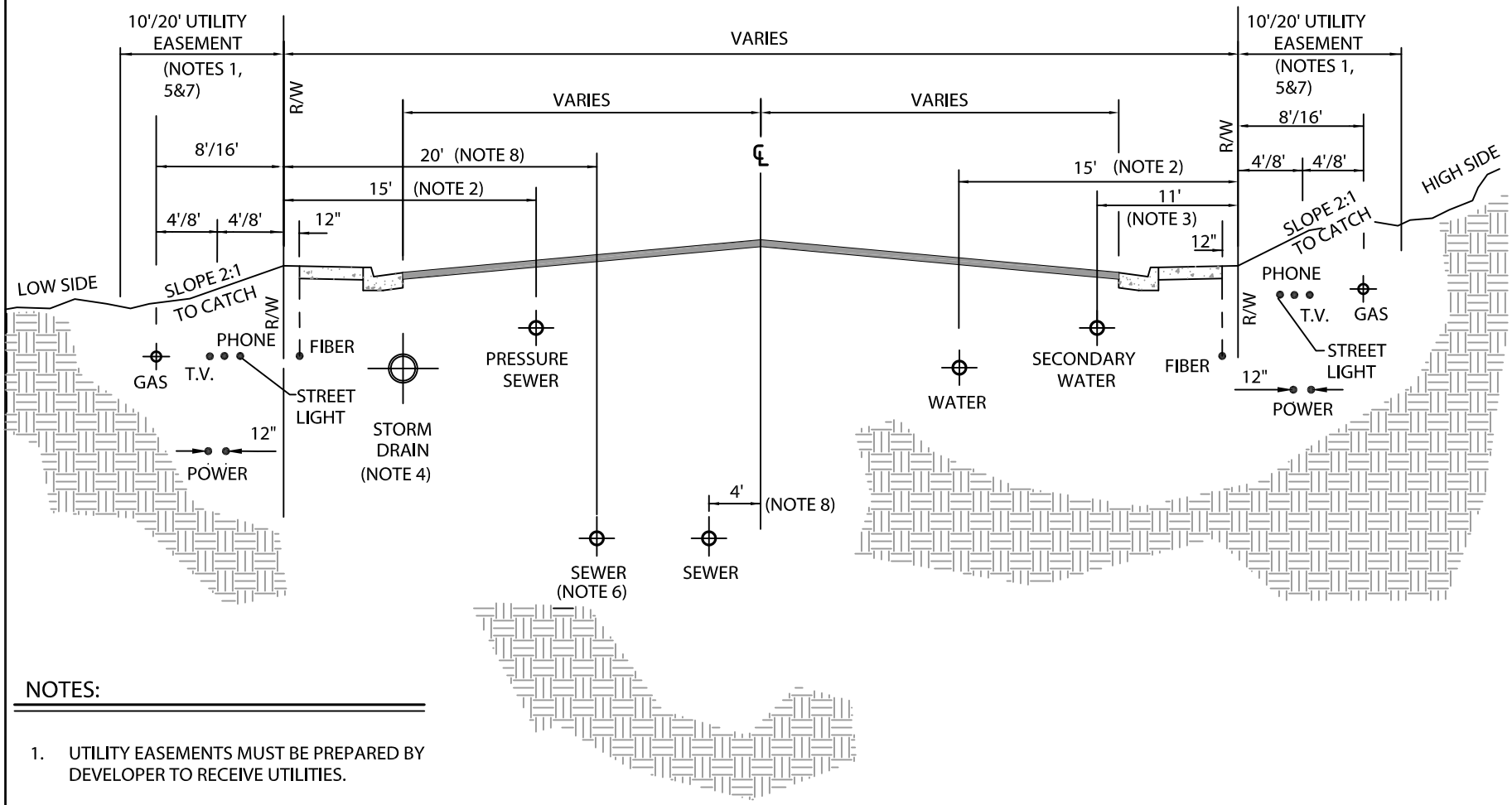

NOTES:

1. UTILITY EASEMENTS MUST BE PREPARED BY DEVELOPER TO RECEIVE UTILITIES.
2. 21' IF TRAIL EXISTS.
3. 17' IF TRAIL EXISTS.
4. LOCATE STORM DRAIN UNDER LIP OF CURB.
5. 10' IN RESIDENTIAL AREAS / 20' IN INDUSTRIAL & COMMERCIAL AREAS.
6. OPTIONAL FOR ARTERIALS AND MAJOR COLLECTORS ONLY.
7. ALL UTILITIES HAVE THE OPTION OF USING THE REAR LOT EASEMENT.
8. MEASURED AT CENTER OF MANHOLES.
9. UTILITY EASEMENTS MUST BE PREPARED BY DEVELOPER TO RECEIVE UTILITIES.

TYPICAL SECTION

N.T.S.

MINIMUM DEPTHS	
WATER	36"
TELEPHONE	30"
POWER	40"
GAS	30"
SEC. WATER	24"
SAN. SEWER	9'
STORM DRAIN	-
TELEVISION	30"
FIBER	30"

DETAIL No.: R3

SHEET: 1 of 1

SCALE: N.T.S.

DATE: FEB. 2019

UTILITY LOCATION

ENOCH CITY
900 EAST MIDVALLEY RD
Enoch, UT 84721
Tel. (435) 586-1119

Copyright © 2019

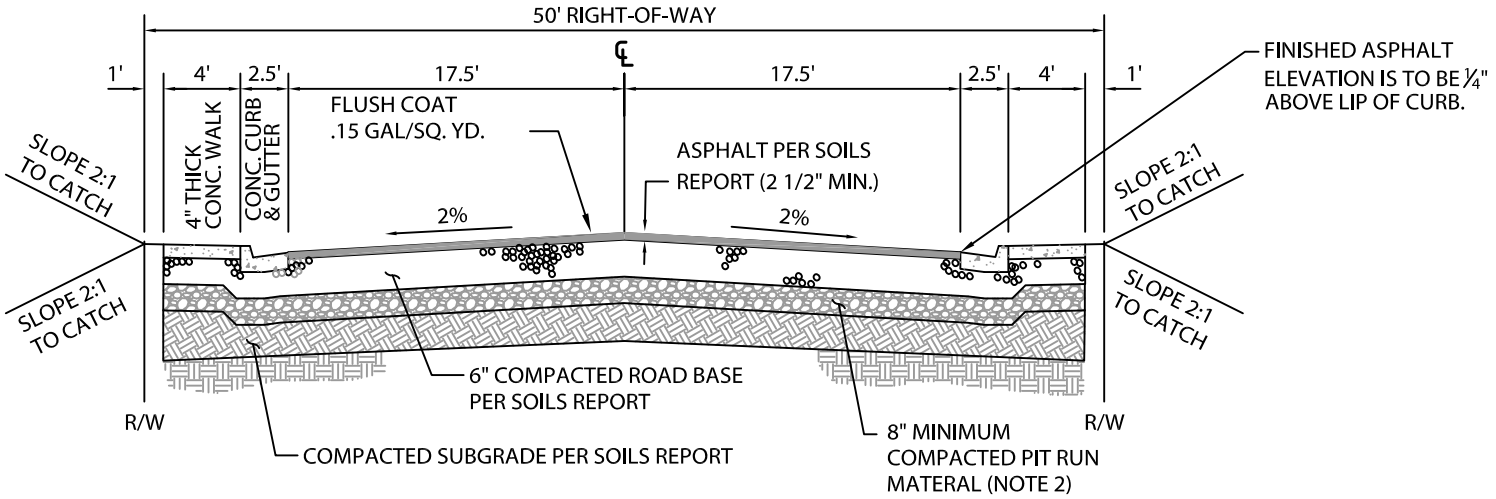

TYPICAL ROAD SECTION
50' RIGHT-OF-WAY

N.T.S.

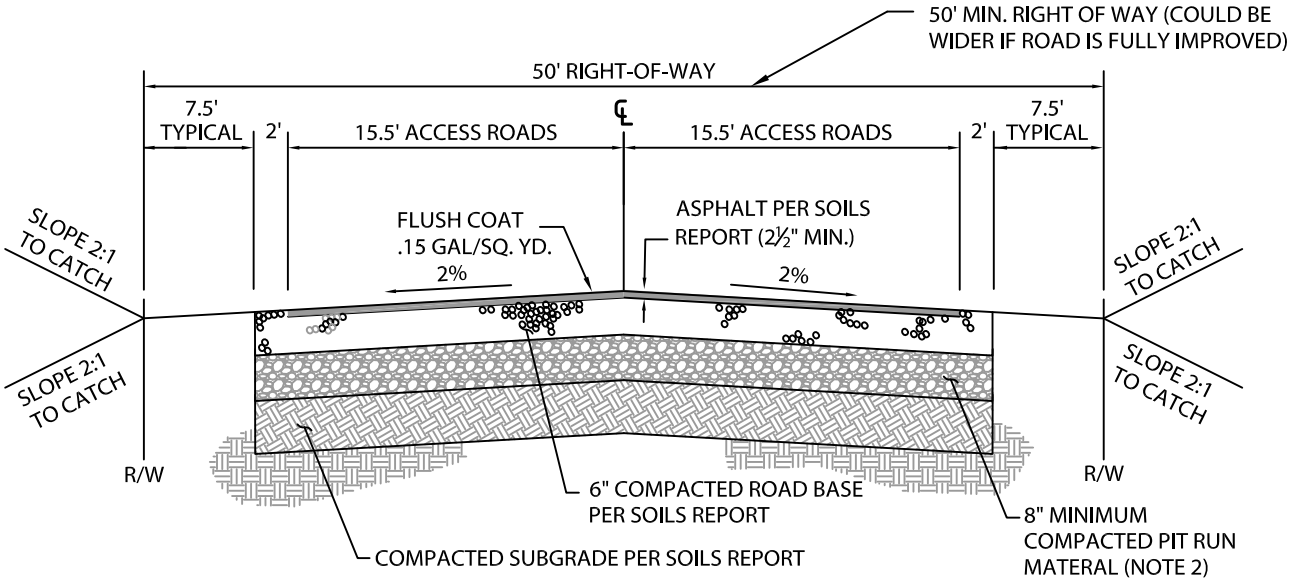

TYPICAL ROAD SECTION
UNIMPROVED ROAD

N.T.S.

ENOCH CITY

ENOCH CITY
900 EAST MIDVALLEY RD
Enoch, UT 84721
Tel. (435) 586-1119

Copyright © 2019

TYPICAL 50' ROAD SECTION

SCALE:
N.T.S.

DATE:
FEB. 2019

DETAIL No.:
R4.1

SHEET:
1 of 2

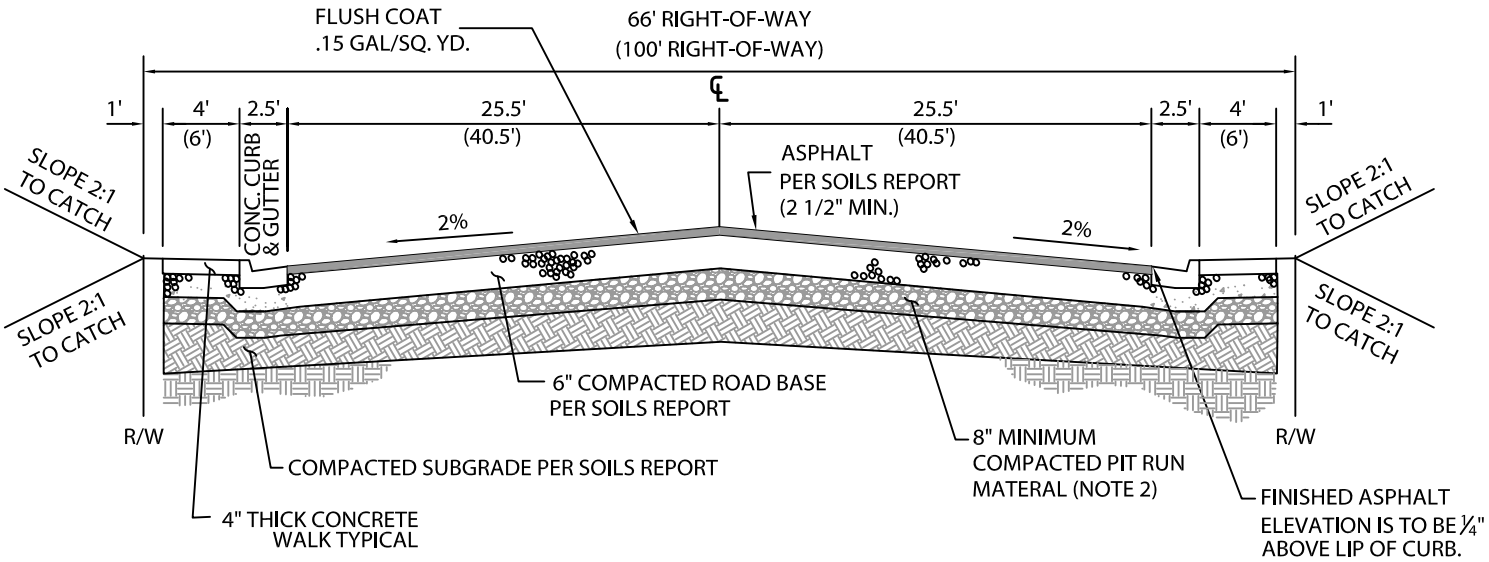

TYPICAL ROAD SECTION
66' RIGHT-OF-WAY
(100' RIGHT OF WAY)

N.T.S.

NOTES:

1. BACK OF SIDEWALK TO BE BACKFILLED TO TOP OF CONCRETE.
2. PIT RUN MATERIAL CAN BE ELIMINATED IF NATIVE MATERIAL MEETS OR EXCEEDS PIT RUN MATERIAL STANDARD GRADATION.

ENOCH CITY
900 EAST MIDVALLEY RD
Enoch, UT 84721
Tel. (435) 586-1119

Copyright © 2019

TYPICAL ROAD SECTION

SCALE:
N.T.S.

DATE:
FEB. 2019

DETAIL No.:
R4.2

SHEET:
2 of 2

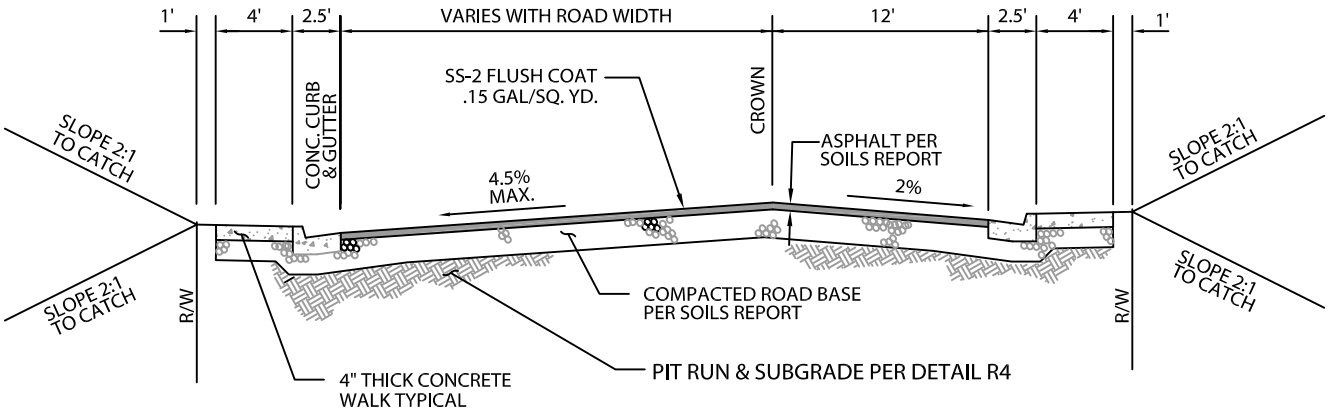

TYPICAL ROAD SECTION w/ CROSS SLOPE

N.T.S.

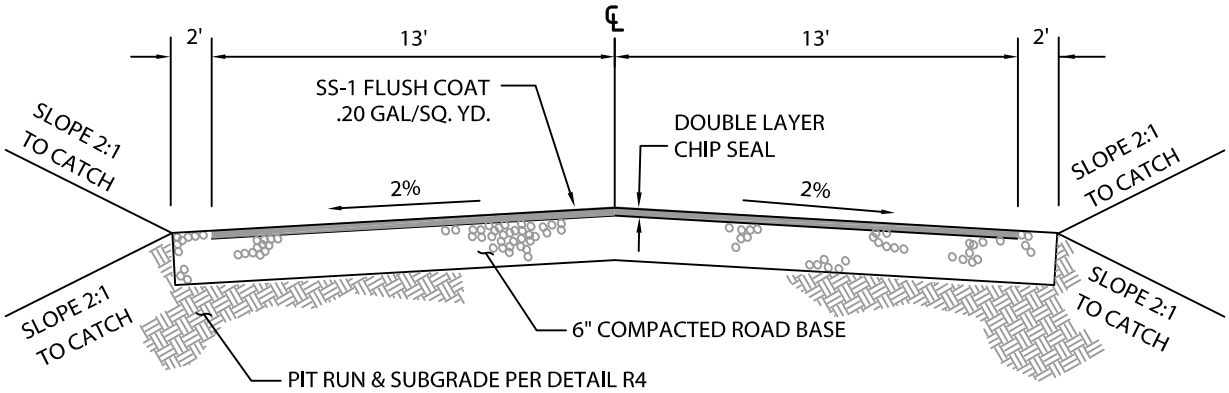

TYPICAL ROAD SECTION FOR TEMPORARY SECONDARY ACCESS STREET

N.T.S.

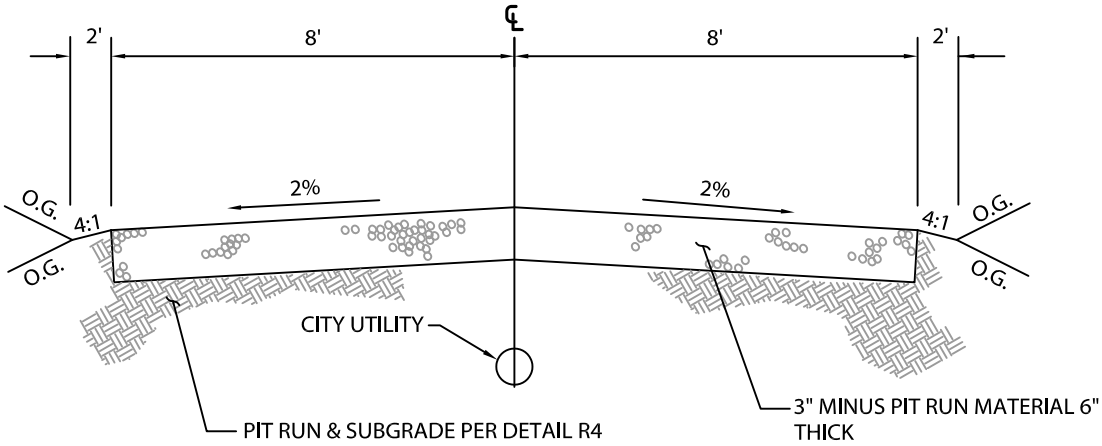

TYPICAL ROAD SECTION FOR TEMPORARY CITY UTILITY MAINTENANCE ACCESS ROADS

N.T.S.

ENOCH CITY

ENOCH CITY
900 EAST MIDVALLEY RD
Enoch, UT 84721
Tel. (435) 586-1119

Copyright © 2019

SPECIAL ROAD SECTION

SCALE:
N.T.S.

DATE:
FEB. 2019

DETAIL No.:
R5

SHEET:
1 of 1

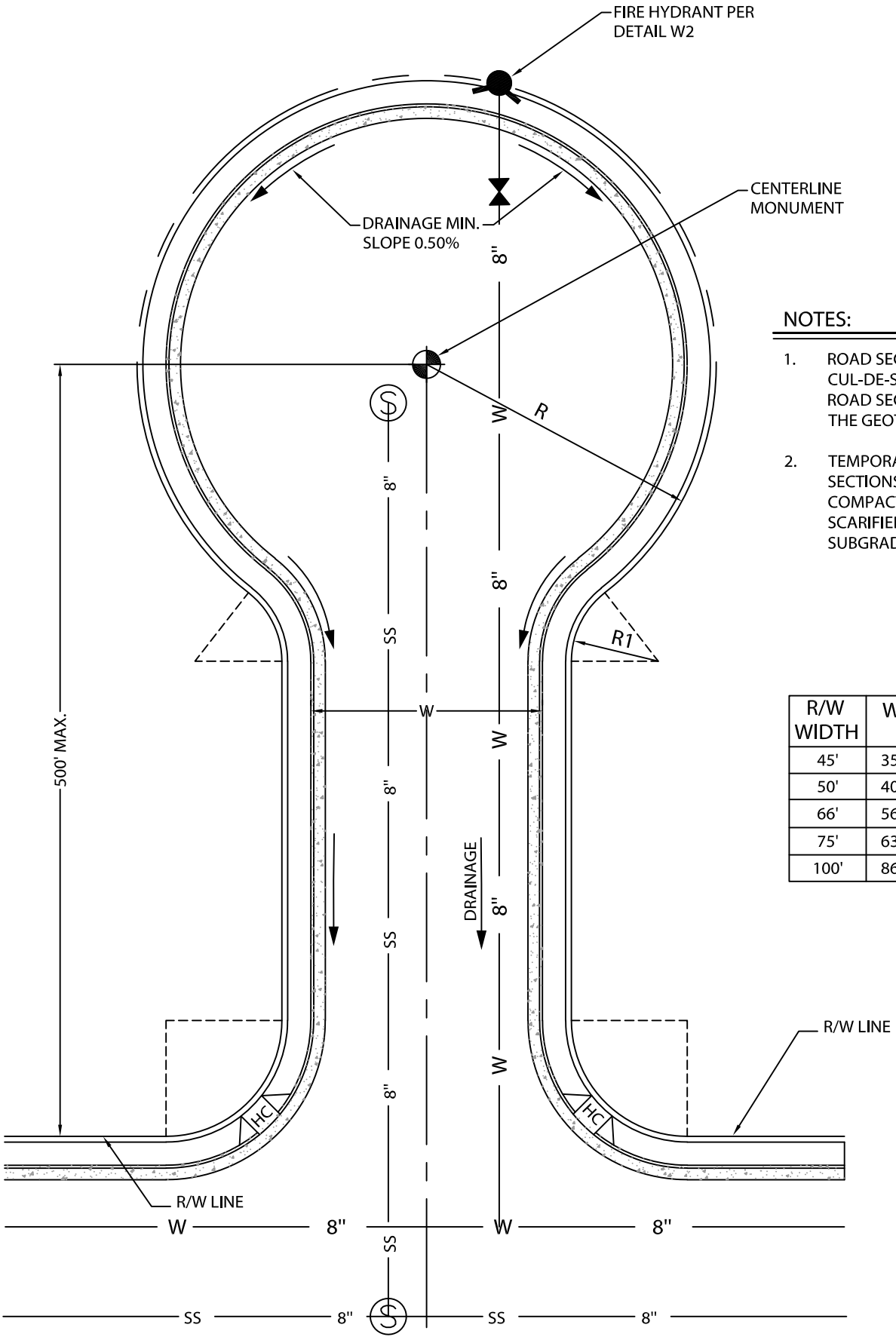

NOTES:

1. ROAD SECTIONS FOR PERMANENT CUL-DE-SACS SHALL BE THE SAME ROAD SECTION AS RECOMMENDED BY THE GEOTECHNICAL ENGINEER

2. TEMPORARY CUL-DE-SAC BULB ROAD SECTIONS SHALL BE 6-INCH COMPACTED ROAD BASE ON 12" SCARIFIED AND RECOMPACTED SUBGRADE.

R/W WIDTH	W	R (MIN.)	R1 (MIN.)
45'	35'	50'	15'
50'	40'	55'	15'
66'	56'	60'	20'
75'	63'	60'	30'
100'	86'	60'	35'

ENOCH CITY
900 EAST MIDVALLEY RD
Enoch, UT 84721
Tel. (435) 586-1119

Copyright © 2019

TYPICAL CUL-DE-SAC

SCALE: N.T.S.

DATE: FEB. 2019

DETAIL No.: R6

SHEET: 1 of 1

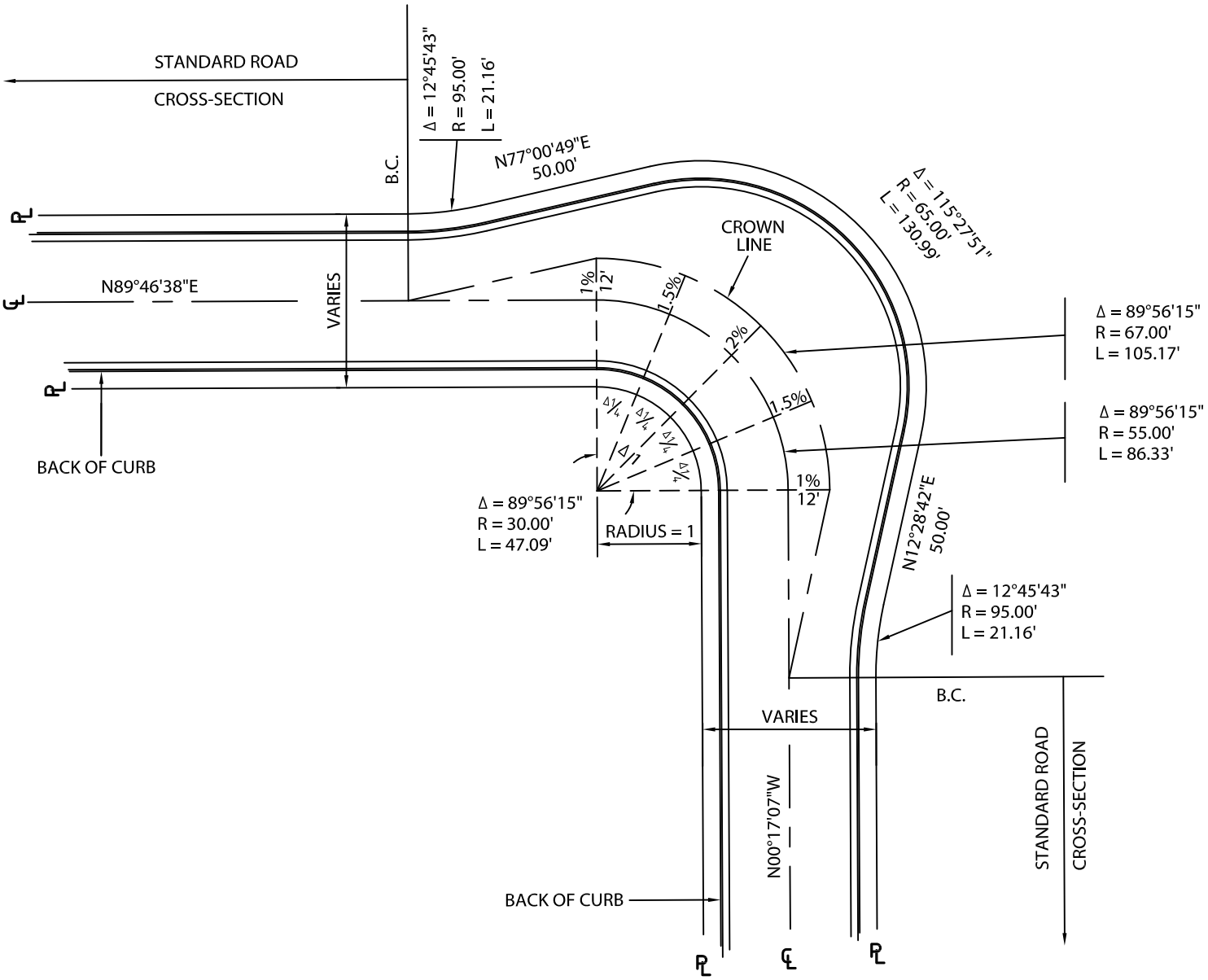

NOTES:

1. USE NORMAL SECTION FROM INNER CURB TO CENTER LINE.
2. FROM CROWN LINE TO OUTER CURB, THE STANDARD SLOPE IS 2%.
3. SUPER ELEVATION PERCENTAGES SHOWN ARE A STRAIGHT GRADE FROM CENTER LINE TO CROWN.
4. ELEVATIONS ARE REQUIRED AT EACH B.C..
5. KNUCKLES ARE ALLOWED ON 45' & 55' STREETS ONLY.

NOTES:

Δ 1 >75° USE RADIUS 1=30' MIN.
65° TO 75° USE RADIUS 1=35' MIN.
55° TO 65° USE RADIUS 1=45' MIN.

ENOCH CITY
900 EAST MIDVALLEY RD
Enoch, UT 84721
Tel. (435) 586-1119

Copyright © 2019

TYPICAL KNUCKLE FOR 50' WIDE STREET

SCALE:
N.T.S.

DATE:
FEB. 2019

DETAIL No.:
R7

SHEET:
1 of 1

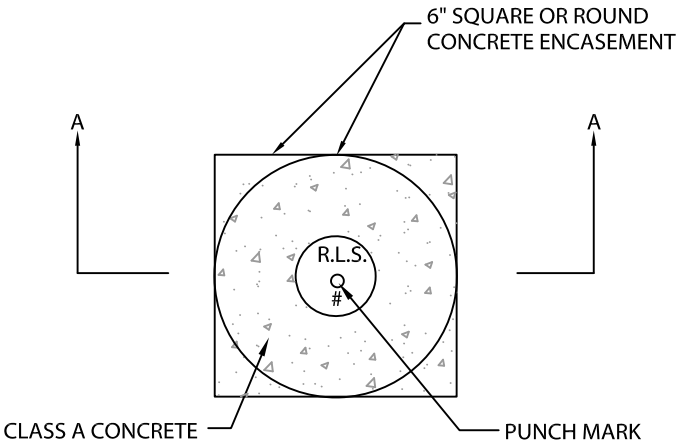

PLAN VIEW

N.T.S.

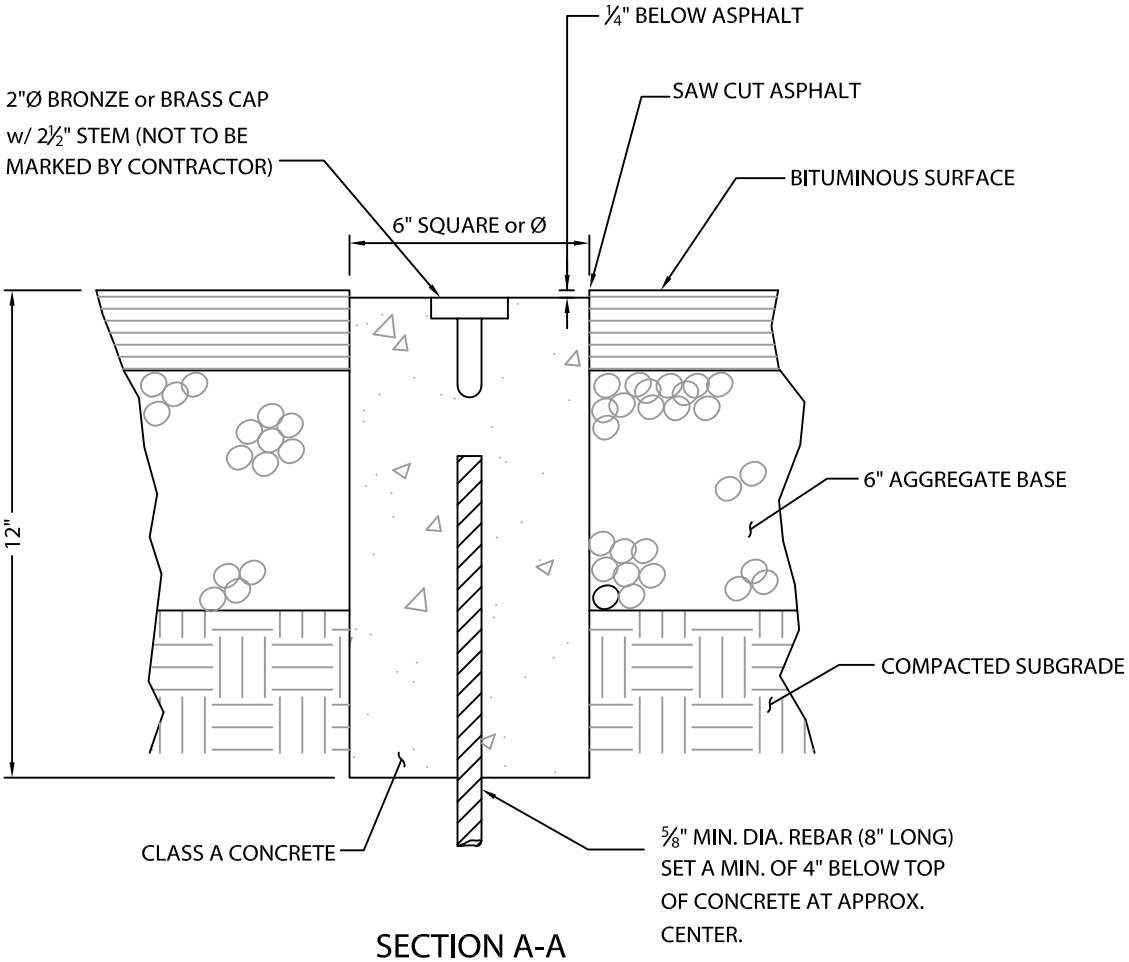

SECTION A-A

N.T.S.

ENOCH CITY

900 EAST MIDVALLEY RD
Enoch, UT 84721
Tel. (435) 586-1119

Copyright © 2019

CENTERLINE MONUMENT

SCALE:
N.T.S.

DATE:
FEB. 2019

DETAIL No.:
R8

SHEET:
1 of 1

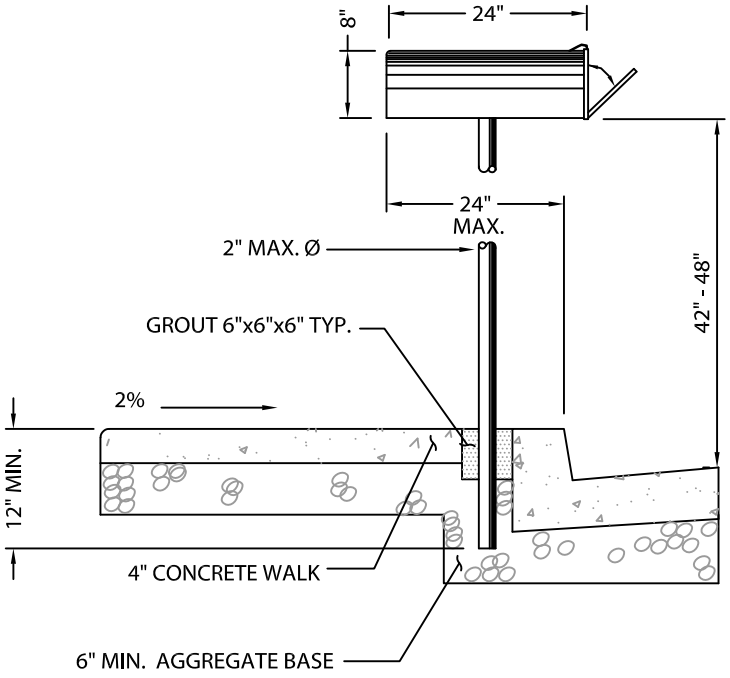

TYPICAL SECTION SHOWN WITH GROUT

N.T.S.

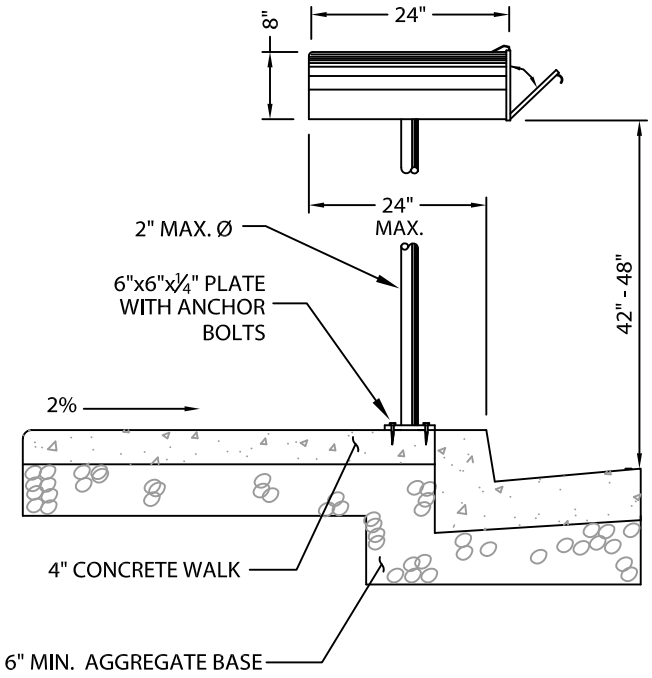

TYPICAL SECTION SHOWN WITH ANCHOR BOLTS

N.T.S.

ENOCH CITY
900 EAST MIDVALLEY RD
Enoch, UT 84721
Tel. (435) 586-1119

Copyright © 2019

MAILBOX

DETAIL No.: R9

SCALE: N.T.S.

DATE: FEB. 2019

SHEET: 1 of 1

NOTES:

1. SIGN POST SHALL BE SQUARE, GALVANIZED AND PERFORATED ON ALL FOUR SIDES.
2. ATTACH POST TO SLEEVE BY USING AT LEAST TWO ⅜" DIA. DRIVE RIVETS OR BOLTS.
3. PROVIDE 6" MINIMUM LAP BETWEEN POST AND THE SLEEVE.
4. UNLESS APPROVED, ALL SIGNS SHALL BE PLACE BEHIND THE SIDEWALK, MIDWAY BETWEEN THE P.C. & P.T. OF THE CURVE OF THE SIDEWALK.
5. CAP AND CROSS BRACKETS CAN BE USED TO MOUNT STREET SIGN WHEN APPROVED BY THE CITY ENGINEER.
6. UNLESS OTHERWISE INDICATED HEREON SIGN FACE SIZES SHALL NOT BE LESS THAN THE SIGN SIZES FOR CONVENTIONAL ROADS AS RECOMMENDED IN THE LATEST APPROVED VERSION OF THE MANUAL ON UNIFORM TRAFFIC CONTROL DEVICES. (MUTCD)

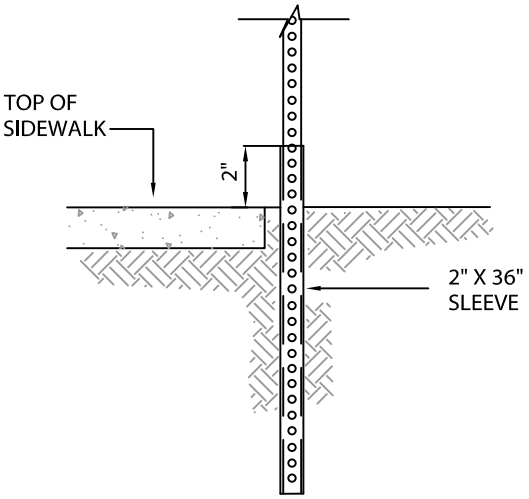

SECTION

N.T.S.

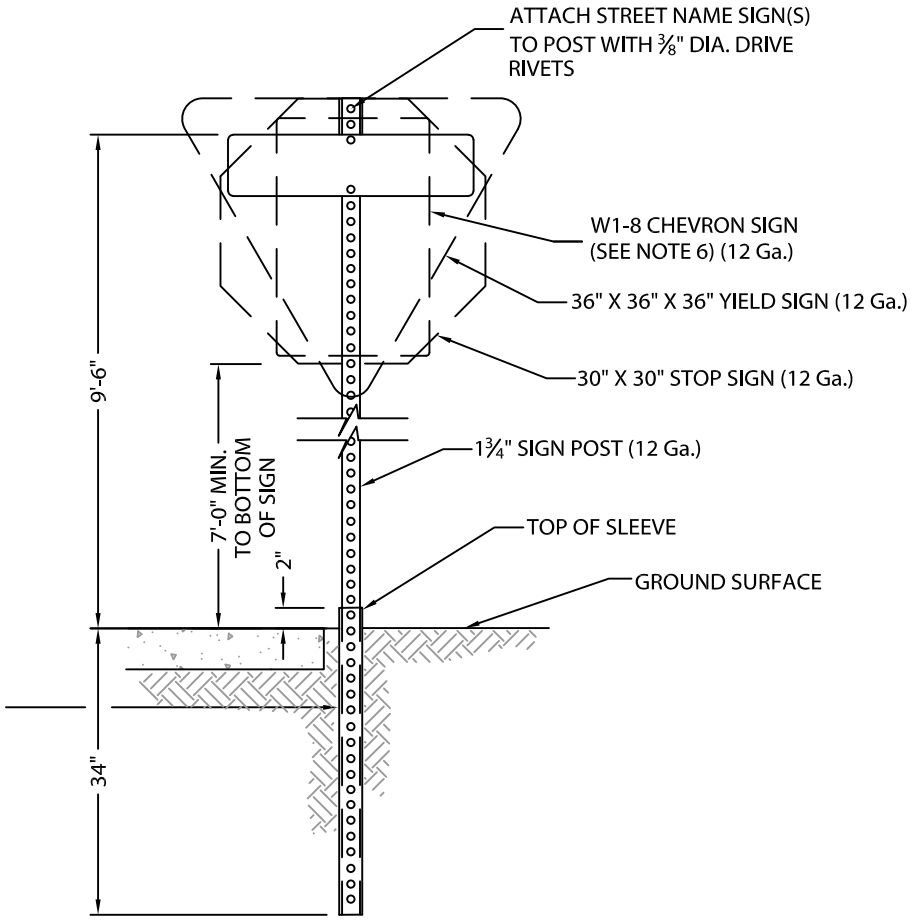

INSTALLATION DETAIL

N.T.S.

ENOCH CITY

ENOCH CITY
900 EAST MIDVALLEY RD
Enoch, UT 84721
Tel. (435) 586-1119

Copyright © 2019

STREET SIGN

SCALE: N.T.S.

DATE: FEB. 2019

DETAIL No.: R10.1

SHEET: 1 of 2

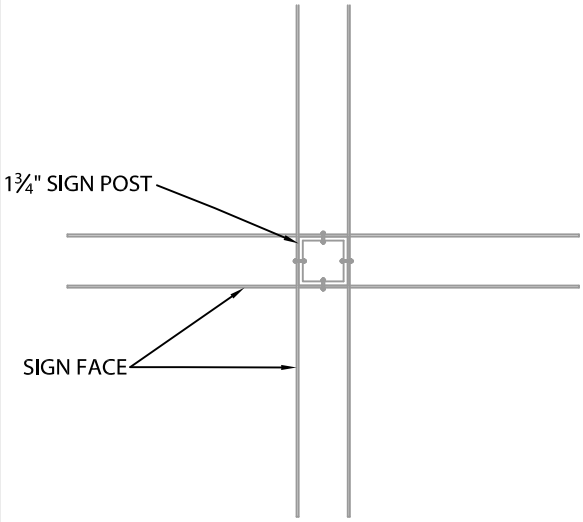

TOP VIEW

N.T.S.

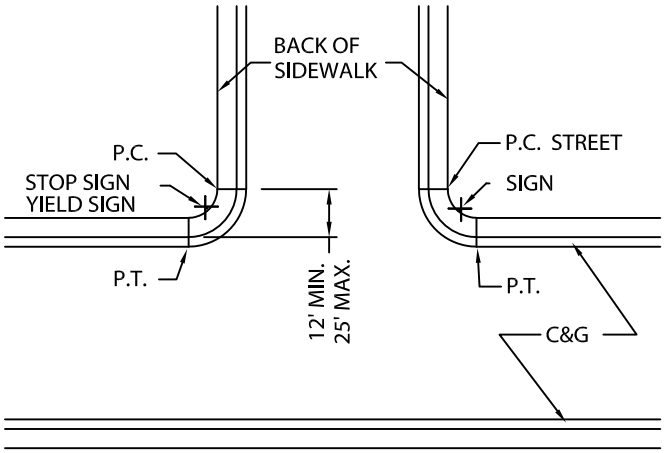

STOP & STREET SIGN
LOCATION DETAIL

N.T.S.

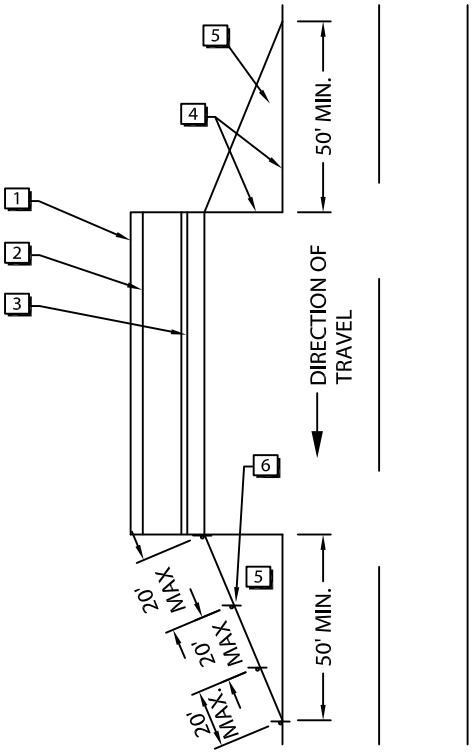

ASPHALT TAPER DETAIL

N.T.S.

CONSTRUCTION NOTES:

1. RIGHT OF WAY LINE
2. SIDEWALK
3. CURB AND GUTTER
4. SAW CUT REQUIRED
5. ASPHALT TAPER PER SOILS REPORT
6. CHEVRON SIGNS PER INSTALLATION DETAIL (ONE SIGN AT CURB & ASPHALT THEN EVERY 20' MAX.)

ENOCH CITY
900 EAST MIDVALLEY RD
Enoch, UT 84721
Tel. (435) 586-1119

Copyright © 2019

STREET SIGN &
ASPHALT TAPERS

SCALE:
N.T.S.

DATE:
FEB. 2019

DETAIL No.:
R10.2

SHEET:
2 of 2

SINGLE LINE SIGN 6"

N.T.S.

DOUBLE LINE SIGN 6"

N.T.S.

SIGN CROSS-SECTION

N.T.S.

NOTES:

1. SIGNS SHALL BE "EXTRUDED BLADE".
2. SIGN FACE SHALL BE WHITE LETTERS ON GREEN BACKGROUND 100% HIGH INTENSITY OR DIAMOND GRADE REFLECTIVE SHEETING BOTH LETTERS AND BACKGROUND.
3. ALL LETTERS SHALL BE UPPER CASE. ALL LETTERS AND NUMBERS SHALL CONFORM TO THE HEIGHT, WIDTH AND STROKE WIDTH, AND SPACING, AS PER U.S. DEPARTMENT OF TRANSPORTATION PUBLICATION "STANDARD ALPHABETS FOR HIGHWAY SIGNS".
4. SERIES LETTERS SHALL CONFORM TO THE FOLLOWING REQUIREMENTS AS DETERMINED BY CLASS OF SIGN CALLED FOR.
5. DOUBLE LINED SIGNS ARE USED FOR STREETS HAVING BOTH NUMBERS AND NAMES. THE STREET NUMBER SHALL BE THE PRIMARY COPY.
6. 6061 - T6 HEAT TREATED HIGH TENSILE DEGREASED AND ALODINE 1200 FINISH. THICKNESS TO BE 0.08 FOR 6" BLADE.

SIGN CLASS	SIGN LENGTH	PRIMARY COPY	SUFFIX COPY
SINGLE LINE 6"	24"	4" C, D SERIES	
	30"	4" C, D SERIES	
	36"	4" A, B, C, D SERIES	
DOUBLE LINE 6"	24"	4" C, D SERIES	2" C SERIES
	30"	4" C, D SERIES	2" C SERIES
	36"	4" A, B, C, D SERIES	2" C SERIES

ENOCH CITY

ENOCH CITY
900 EAST MIDVALLEY RD
Enoch, UT 84721
Tel. (435) 586-1119

Copyright © 2019

STREET SIGN FACE

SCALE:
N.T.S.

DATE:
FEB. 2019

DETAIL No.:
R11

SHEET:
1 of 1

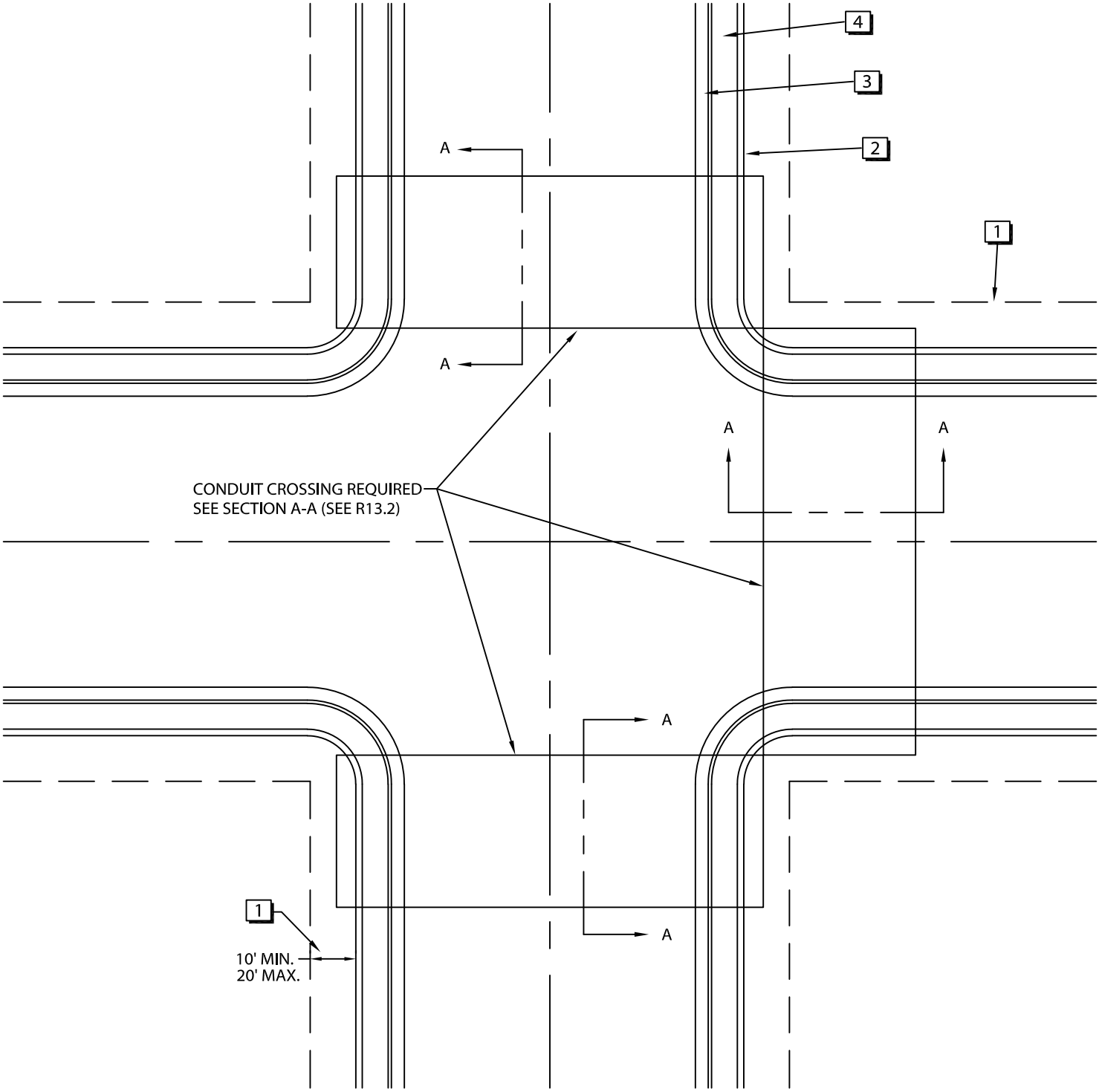

TYPICAL CONDUIT CROSSING PLAN

N.T.S.

ENOCH CITY

ENOCH CITY

900 EAST MIDVALLEY RD
Enoch, UT 84721
Tel. (435) 586-1119

Copyright © 2019

CONDUIT CROSSING

SCALE:
N.T.S.

DATE:
FEB. 2019

DETAIL No.:

R12.1

SHEET:
1 of 2

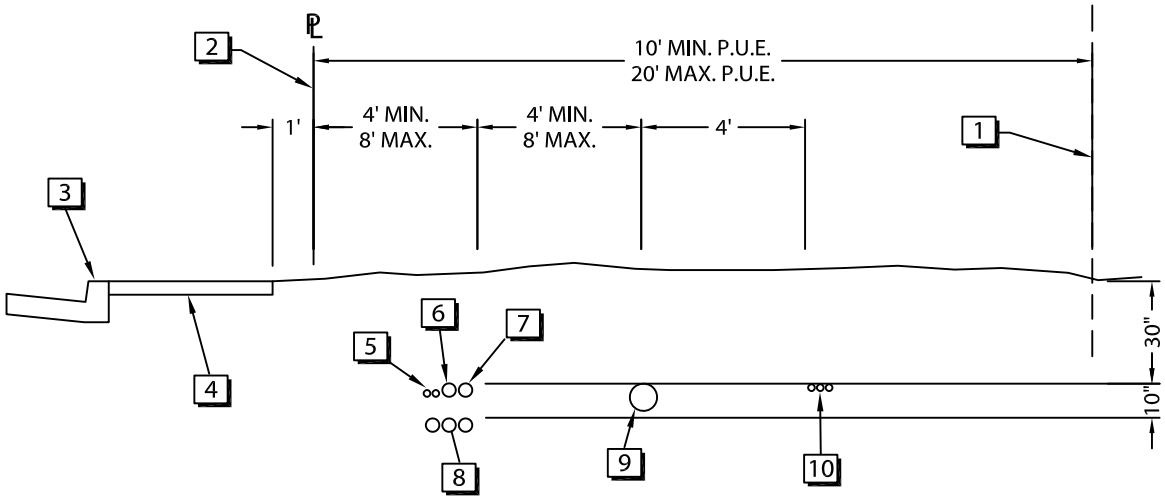

SECTION A-A
CONDUIT CROSSING TYPICAL LAYOUT

N.T.S.

NOTES:

1. EXTEND ALL CONDUITS 3' BEYOND PROPERTY LINE.

2. SIGNAL CONDUITS INSTALLED ONLY AT INTERSECTIONS OF ARTERIALS WITH MAJOR COLLECTORS AND INTERSECTIONS OF TWO ARTERIALS.

3. CONDUITS CAN BE ELIMINATED WITH WRITTEN APPROVAL OF UTILITIES.

4. ALL CONDUIT TRENCHES TO BE COMPACTED TO 95% OF MAXIMUM FOR FULL DEPTH.

5. CONDUITS LOCATED ON ALL INTERSECTION LEGS BUT ONE.

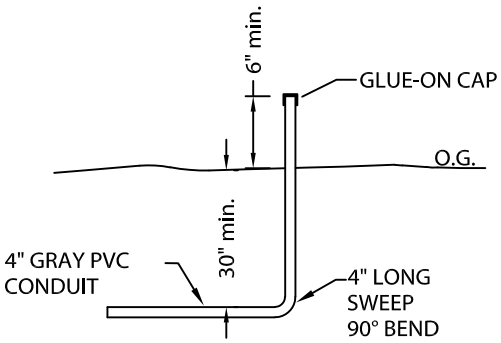

DETAIL A
SPARE CONDUIT VERTICAL LOCATE RISER DETAIL

N.T.S.

CONSTRUCTION NOTES:

1. PUBLIC UTILITY EASEMENT (P.U.E.)
   10' IN RESIDENTIAL AREAS.
   20' IN INDUSTRIAL AND COMMERCIAL AREAS.
2. PROPERTY LINE
3. CURB & GUTTER.
4. SIDEWALK.
5. (2) 2" GRAY PVC CABLE T.V. CONDUITS (TYP.)
6. (1) 4" GRAY PVC TELEPHONE CONDUIT (TYP.)
7. (1) 4" GRAY PVC SPARE CONDUIT W/ LOCATE RISER (TYP.) (SEE DETAIL A)
8. (3) 6" GRAY PVC ELECTRICAL CONDUITS (TYP.)
9. (1) 8" SCH40 - WHITE PVC GAS CONDUIT (TYP.)
10. (3) 2" GRAY PVC CONDUITS FOR SIGNALS (TYP.) (SEE NOTE 2)

ENOCH CITY
900 EAST MIDVALLEY RD
Enoch, UT 84721
Tel. (435) 586-1119

Copyright © 2019

CONDUIT CROSSING

SCALE: N.T.S.

DATE: FEB. 2019

DETAIL No.: R12.2

SHEET: 2 of 2

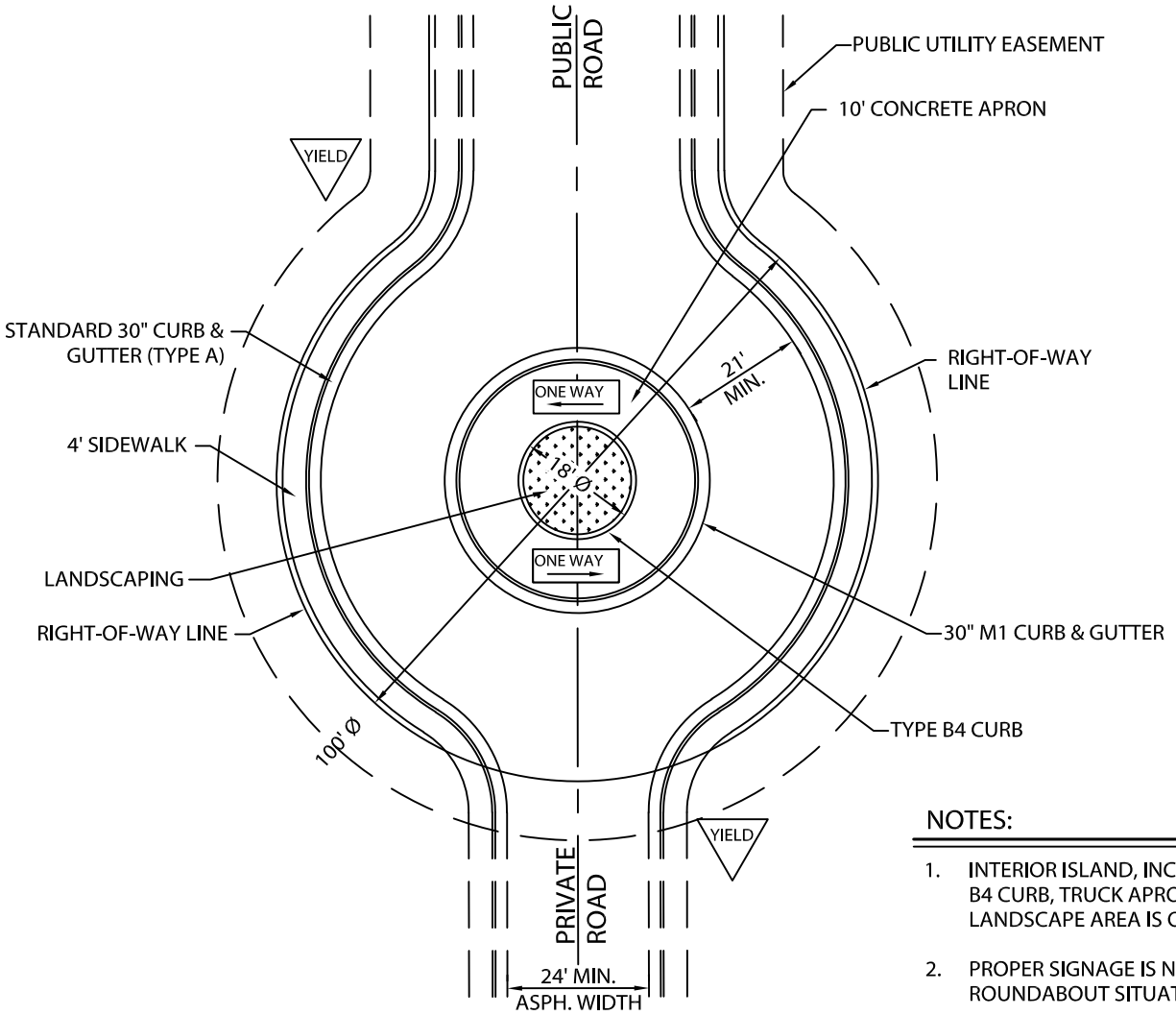

NOTES:

1. INTERIOR ISLAND, INCLUDING M1 & B4 CURB, TRUCK APRON AND LANDSCAPE AREA IS OPTIONAL.
2. PROPER SIGNAGE IS NEEDED FOR A ROUNDABOUT SITUATION.

P.U.D. ACCESS TURN-AROUND PLAN VIEW

N.T.S.

ENOCH CITY
900 EAST MIDVALLEY RD
Enoch, UT 84721
Tel. (435) 586-1119

Copyright © 2019

P.U.D. ACCESS TURN AROUND

SCALE: N.T.S.

DATE: FEB. 2019

DETAIL No.: R13.1

SHEET: 1 of 2

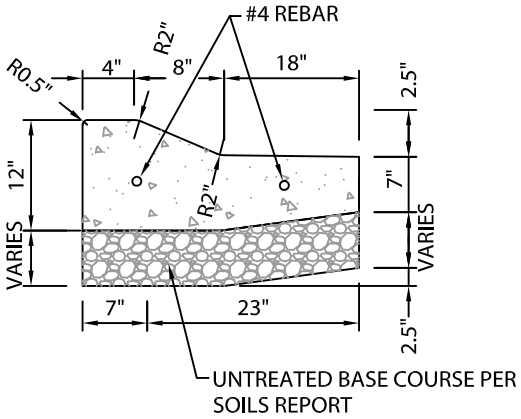

TYPE M1 CURB & GUTTER

N.T.S.

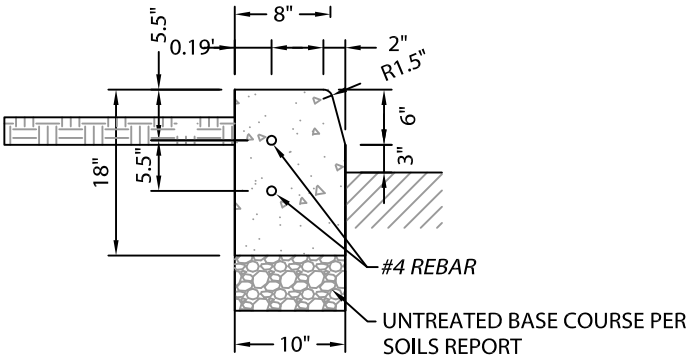

TYPE B4 CURB

N.T.S.

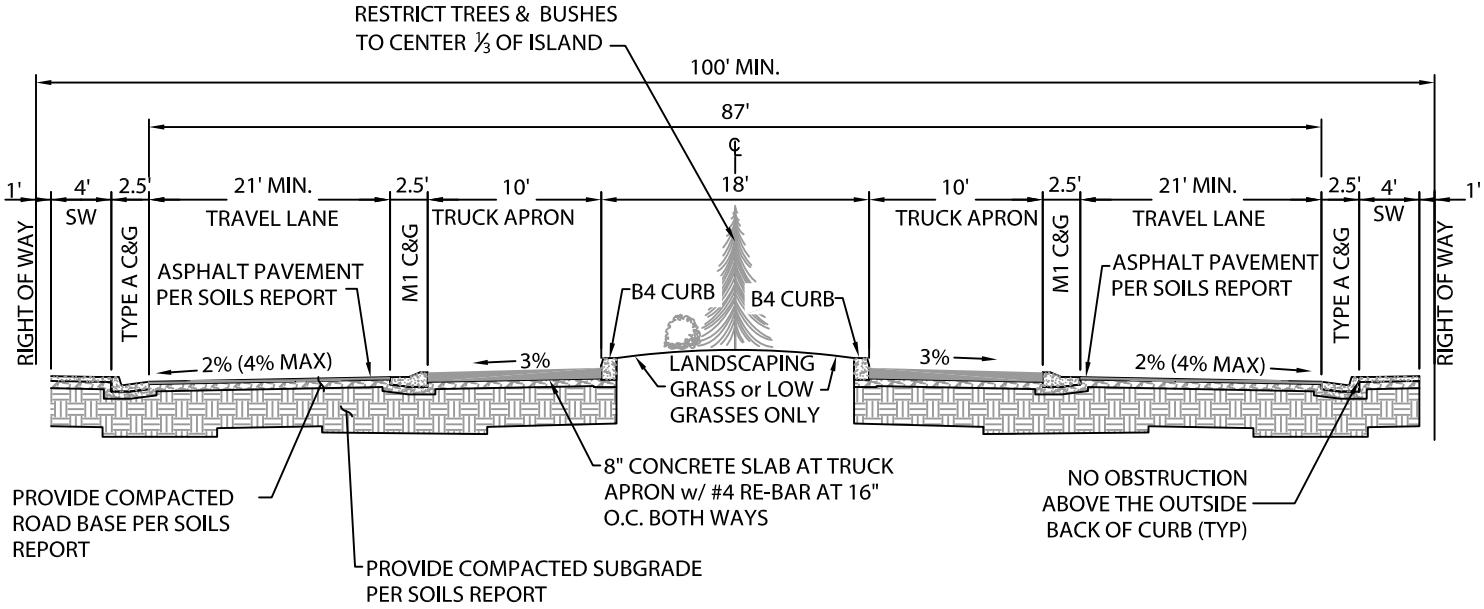

P.U.D. ACCESS TURN-AROUND CROSS SECTION

N.T.S.

ENOCH CITY

ENOCH CITY
900 EAST MIDVALLEY RD
Enoch, UT 84721
Tel. (435) 586-1119

Copyright © 2019

P.U.D. ACCESS TURN AROUND

SCALE:
N.T.S.

DATE:
FEB. 2019

DETAIL No.:
R13.2

SHEET:
2 of 2

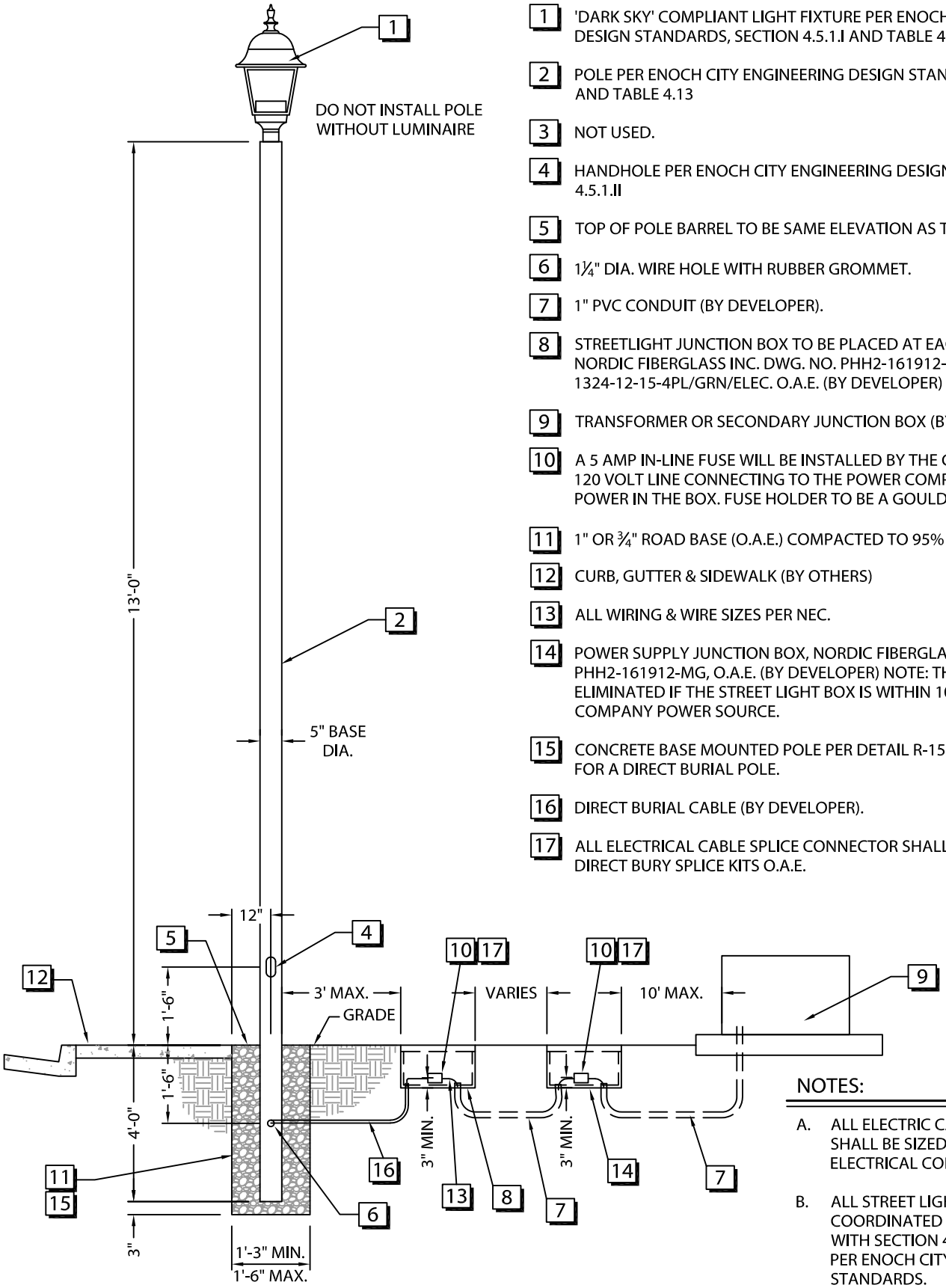

CONSTRUCTION NOTES:

1. 'DARK SKY' COMPLIANT LIGHT FIXTURE PER ENOCH CITY ENGINEERING DESIGN STANDARDS, SECTION 4.5.1.I AND TABLE 4.12
2. POLE PER ENOCH CITY ENGINEERING DESIGN STANDARDS, SECTION 4.5.1.II AND TABLE 4.13
3. NOT USED.
4. HANDHOLE PER ENOCH CITY ENGINEERING DESIGN STANDARDS, SECTION 4.5.1.II
5. TOP OF POLE BARREL TO BE SAME ELEVATION AS TOP OF SIDEWALK.
6. 1¼" DIA. WIRE HOLE WITH RUBBER GROMMET.
7. 1" PVC CONDUIT (BY DEVELOPER).
8. STREETLIGHT JUNCTION BOX TO BE PLACED AT EACH STREET LIGHT, NORDIC FIBERGLASS INC. DWG. NO. PHH2-161912-MG, OR CARSON 1324-12-15-4PL/GRN/ELEC. O.A.E. (BY DEVELOPER)
9. TRANSFORMER OR SECONDARY JUNCTION BOX (BY POWER COMPANY).
10. A 5 AMP IN-LINE FUSE WILL BE INSTALLED BY THE CONTRACTOR ON THE 120 VOLT LINE CONNECTING TO THE POWER COMPANY'S SECONDARY POWER IN THE BOX. FUSE HOLDER TO BE A GOULD FEBIIII w/ A FSBI, O.A.E.
11. 1" OR ¾" ROAD BASE (O.A.E.) COMPACTED TO 95% OF MAXIMUM DENSITY.
12. CURB, GUTTER & SIDEWALK (BY OTHERS)
13. ALL WIRING & WIRE SIZES PER NEC.
14. POWER SUPPLY JUNCTION BOX, NORDIC FIBERGLASS INC. DWG. NO. PHH2-161912-MG, O.A.E. (BY DEVELOPER) NOTE: THIS BOX CAN BE ELIMINATED IF THE STREET LIGHT BOX IS WITHIN 10 FEET OF THE POWER COMPANY POWER SOURCE.
15. CONCRETE BASE MOUNTED POLE PER DETAIL R-15 CAN BE SUBSTITUTED FOR A DIRECT BURIAL POLE.
16. DIRECT BURIAL CABLE (BY DEVELOPER).
17. ALL ELECTRICAL CABLE SPLICE CONNECTOR SHALL BE WATERPROOF 3M DIRECT BURY SPLICE KITS O.A.E.

NOTES:

A. ALL ELECTRIC CABLES AND CONDUITS SHALL BE SIZED PER THE NATIONAL ELECTRICAL CODE.

B. ALL STREET LIGHT LOCATIONS TO BE COORDINATED WITH POWER COMPANY WITH SECTION 4.52.IV AND TABLE 4.13 PER ENOCH CITY ENGINEERING DESIGN STANDARDS.

ENOCH CITY

ENOCH CITY
900 EAST MIDVALLEY RD
Enoch, UT 84721
Tel. (435) 586-1119

Copyright © 2019

LOCAL STREET LIGHT

SCALE:
N.T.S.

DATE:
FEB. 2019

DETAIL No.:
R14

SHEET:
1 of 1

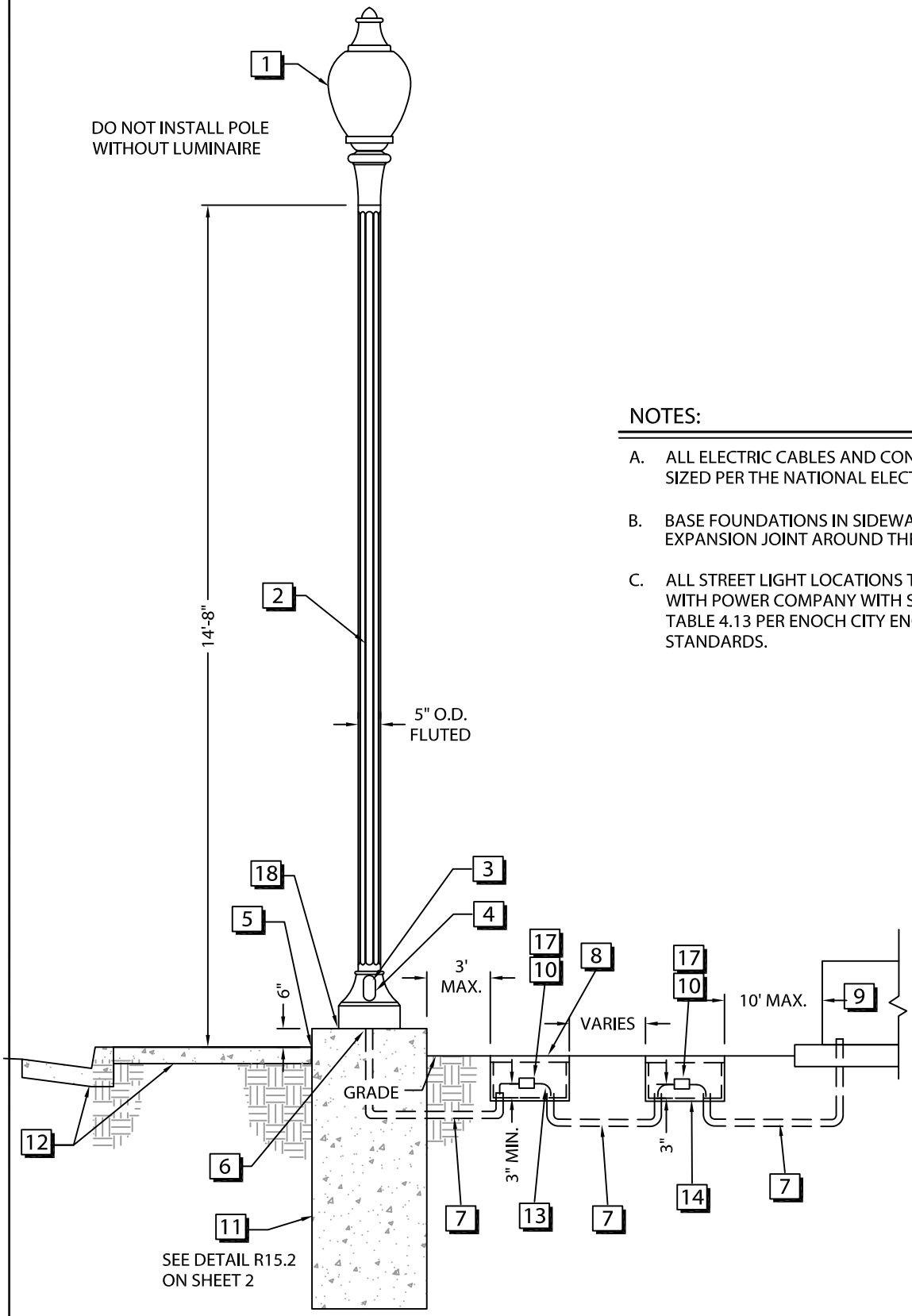

POLE/LUMINAR DETAIL

N.T.S.

NOTES:

A. ALL ELECTRIC CABLES AND CONDUITS SHALL BE SIZED PER THE NATIONAL ELECTRICAL CODE.

B. BASE FOUNDATIONS IN SIDEWALK SHALL HAVE A ½" EXPANSION JOINT AROUND THE BASE.

C. ALL STREET LIGHT LOCATIONS TO BE COORDINATED WITH POWER COMPANY WITH SECTION 4.52.IV AND TABLE 4.13 PER ENOCH CITY ENGINEERING DESIGN STANDARDS.

ENOCH CITY
900 EAST MIDVALLEY RD
Enoch, UT 84721
Tel. (435) 586-1119

Copyright © 2019

COMMERCIAL STREET LIGHT

SCALE:
N.T.S.

DATE:
FEB. 2019

DETAIL No.:
R15.1

SHEET:
1 of 2

CONSTRUCTION NOTES:

1. 'DARK SKY' COMPLIANT LIGHT FIXTURE PER ENOCH CITY ENGINEERING DESIGN STANDARDS, SECTION 4.5.1.I AND TABLE 4.12
2. POLE PER ENOCH CITY ENGINEERING DESIGN STANDARDS, SECTION 4.5.1.II AND TABLE 4.13
3. NOT USED.
4. HANDHOLE PER ENOCH CITY ENGINEERING DESIGN STANDARDS, SECTION 4.5.1.II
5. POLE BASE AT BACK OF SIDEWALK WITH TOP OF BASE CONCRETE TO BE 6" HIGHER THAN TOP OF SIDEWALK. ½"x6" FELT BETWEEN LIGHT BASE AND SIDEWALK.
6. POWER FEED ROUTED THROUGH POLE BASE IN 1" DIA. PVC CONDUIT.
7. 1" PVC CONDUIT (BY DEVELOPER).
8. STREETLIGHT JUNCTION BOX TO BE PLACED AT EACH STREET LIGHT, NORDIC FIBERGLASS INC. DWG. NO. PHH2-161912-MG, OR CARSON 1324-12-15-4PL/GRN/ELEC. O.A.E. (BY DEVELOPER).
9. TRANSFORMER OR SECONDARY JUNCTION BOX (BY POWER COMPANY).
10. A 5 AMP IN-LINE FUSE WILL BE INSTALLED BY THE CONTRACTOR ON THE 120 VOLT LINE CONNECTING TO THE POWER COMPANY'S SECONDARY POWER IN THE BOX. FUSE HOLDER TO BE A GOULD FEBIIII w/ A FSBI, O.A.E.
11. CONCRETE BASE FOUNDATION, TYPE A CONCRETE, REINFORCEMENT AS SHOWN.
12. CURB, GUTTER & SIDEWALK (BY OTHERS)
13. ALL WIRING & WIRE SIZES PER NEC.
14. POWER SUPPLY JUNCTION BOX, NORDIC FIBERGLASS INC. DWG. NO. PHH2-161912-MG, O.A.E. (BY DEVELOPER) NOTE: THIS BOX CAN BE ELIMINATED IF THE STREET LIGHT BOX IS WITHIN 10 FEET OF THE POWER COMPANY POWER SOURCE.
15. NOT USED.
16. ANCHOR BOLTS MATERIAL, SIZE AND PATTERN PER POLE MANUFACTURES REQUIREMENTS.
17. ALL ELECTRICAL CABLE SPLICE CONNECTORS SHALL BE WATERPROOF 3M DIRECT BURY SPLICE KITS O.A.E.
18. NON-SHRINK GROUT BETWEEN POLE BASE AND FOUNDATION.

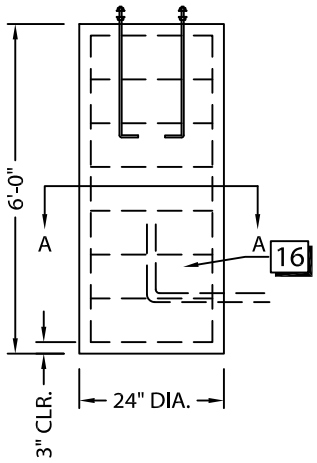

SLIP BASE

N.T.S.

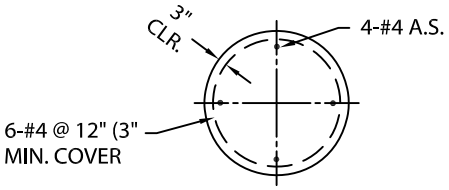

SECTION A-A
REINFORCEMENT

N.T.S.

LIGHT POLE FOUNDATION DETAIL

N.T.S.

ENOCH CITY

ENOCH CITY
900 EAST MIDVALLEY RD
Enoch, UT 84721
Tel. (435) 586-1119

Copyright © 2019

COMMERCIAL STREET LIGHT

SCALE:
N.T.S.

DATE:
FEB. 2019

DETAIL No.:
R15.2

SHEET:
2 of 2

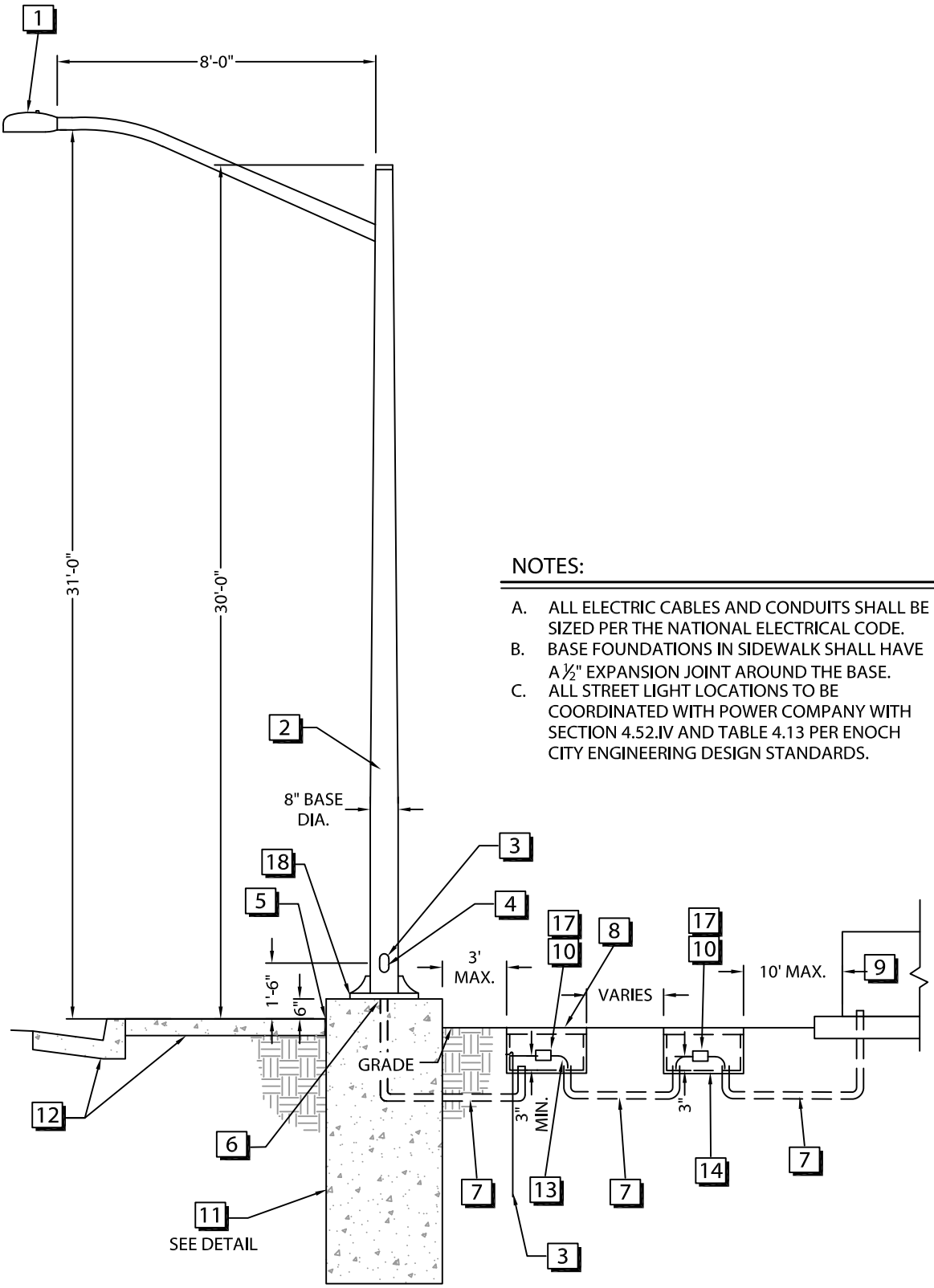

NOTES:

A. ALL ELECTRIC CABLES AND CONDUITS SHALL BE SIZED PER THE NATIONAL ELECTRICAL CODE.
B. BASE FOUNDATIONS IN SIDEWALK SHALL HAVE A ½" EXPANSION JOINT AROUND THE BASE.
C. ALL STREET LIGHT LOCATIONS TO BE COORDINATED WITH POWER COMPANY WITH SECTION 4.52.IV AND TABLE 4.13 PER ENOCH CITY ENGINEERING DESIGN STANDARDS.

POLE/LUMINAR DETAIL

N.T.S.

ENOCH CITY
900 EAST MIDVALLEY RD
Enoch, UT 84721
Tel. (435) 586-1119

Copyright © 2019

INDUSTRIAL STREET LIGHT

SCALE: N.T.S.

DATE: FEB. 2019

DETAIL No.: R16.1

SHEET: 1 of 2

CONSTRUCTION NOTES:

1. 'DARK SKY' COMPLIANT LIGHT FIXTURE PER ENOCH CITY ENGINEERING DESIGN STANDARDS, SECTION 4.5.1.I AND TABLE 4.12
2. POLE PER ENOCH CITY ENGINEERING DESIGN STANDARDS, SECTION 4.5.1.II AND TABLE 4.13
3. ⅝" x 6' COPPER COATED STEEL GROUND ROD w/ NO.6 GROUND WIRE CONNECTED TO GROUND LUG AT HAND HOLE.
4. HANDHOLE PER ENOCH CITY ENGINEERING DESIGN STANDARDS, SECTION 4.5.1.II
5. POLE BASE AT BACK OF SIDEWALK WITH TOP OF BASE CONCRETE TO BE 6" HIGHER THAN TOP OF SIDEWALK. ½"x6" FELT BETWEEN LIGHT BASE AND SIDEWALK.
6. POWER FEED ROUTED THROUGH POLE BASE IN 1" DIA. PVC CONDUIT.
7. 1" PVC CONDUIT (BY DEVELOPER).
8. STREETLIGHT JUNCTION BOX TO BE PLACED AT EACH STREET LIGHT, NORDIC FIBERGLASS INC. DWG. NO. PHH2-161912-MG, OR CARSON 1324-12-15-4PL/GRN/ELEC. O.A.E. (BY DEVELOPER).
9. TRANSFORMER OR SECONDARY JUNCTION BOX (BY POWER COMPANY).
10. A 5 AMP IN-LINE FUSE WILL BE INSTALLED BY THE CONTRACTOR ON THE 120 VOLT LINE CONNECTING TO THE POWER COMPANY'S SECONDARY POWER IN THE BOX. FUSE HOLDER TO BE A GOULD FEBIIII w/ A FSBI, O.A.E.
11. CONCRETE BASE FOUNDATION, TYPE A CONCRETE, REINFORCEMENT AS SHOWN.
12. CURB, GUTTER & SIDEWALK (BY OTHERS)
13. ALL WIRING & WIRE SIZES PER NEC.
14. POWER SUPPLY JUNCTION BOX, NORDIC FIBERGLASS INC. DWG. NO. PHH2-161912-MG, O.A.E. (BY DEVELOPER) NOTE: THIS BOX CAN BE ELIMINATED IF THE STREET LIGHT BOX IS WITHIN 10 FEET OF THE POWER COMPANY POWER SOURCE.
15. SLIP BASE PER POLE MANUFACTURES DETAIL.
16. ANCHOR BOLTS MATERIAL, SIZE AND PATTERN PER POLE MANUFACTURES REQUIREMENTS.
17. ALL ELECTRICAL CABLE SPLICE CONNECTORS SHALL BE WATERPROOF 3M DIRECT BURY SPLICE KITS O.A.E.
18. NON-SHRINK GROUT BETWEEN POLE BASE AND FOUNDATION.

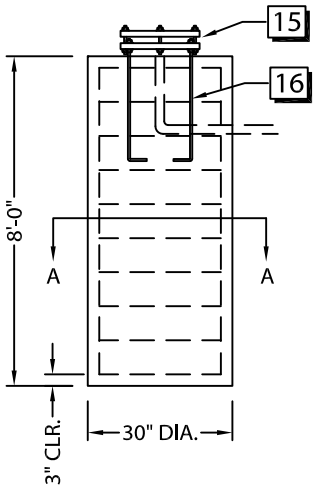

SLIP BASE

N.T.S.

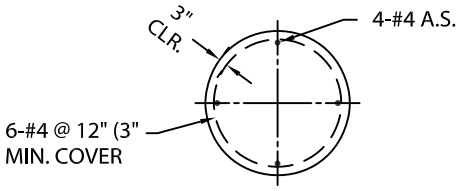

SECTION A-A
REINFORCEMENT

N.T.S.

LIGHT POLE FOUNDATION DETAIL

N.T.S.

ENOCH CITY

ENOCH CITY
900 EAST MIDVALLEY RD
Enoch, UT 84721
Tel. (435) 586-1119

Copyright © 2019

INDUSTRIAL STREET LIGHT

SCALE: N.T.S.

DATE: FEB. 2019

DETAIL No.: R16.2

SHEET: 2 of 2

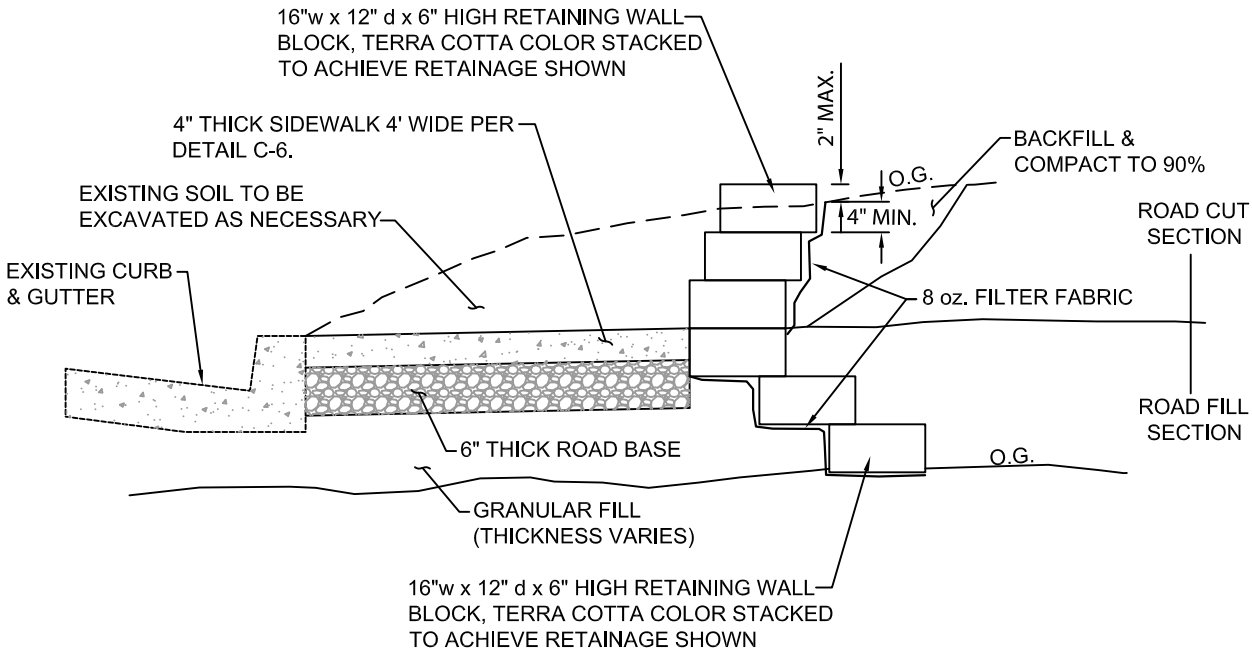

SIDEWALK AT RETAINING WALL DETAIL

N.T.S.

ENOCH CITY
900 EAST MIDVALLEY RD
Enoch, UT 84721
Tel. (435) 586-1119

Copyright © 2019

SIDEWALK AT RETAINING WALL DETAIL

SCALE: N.T.S.

DATE: FEB. 2019

DETAIL No.: R17

SHEET: 1 of 1

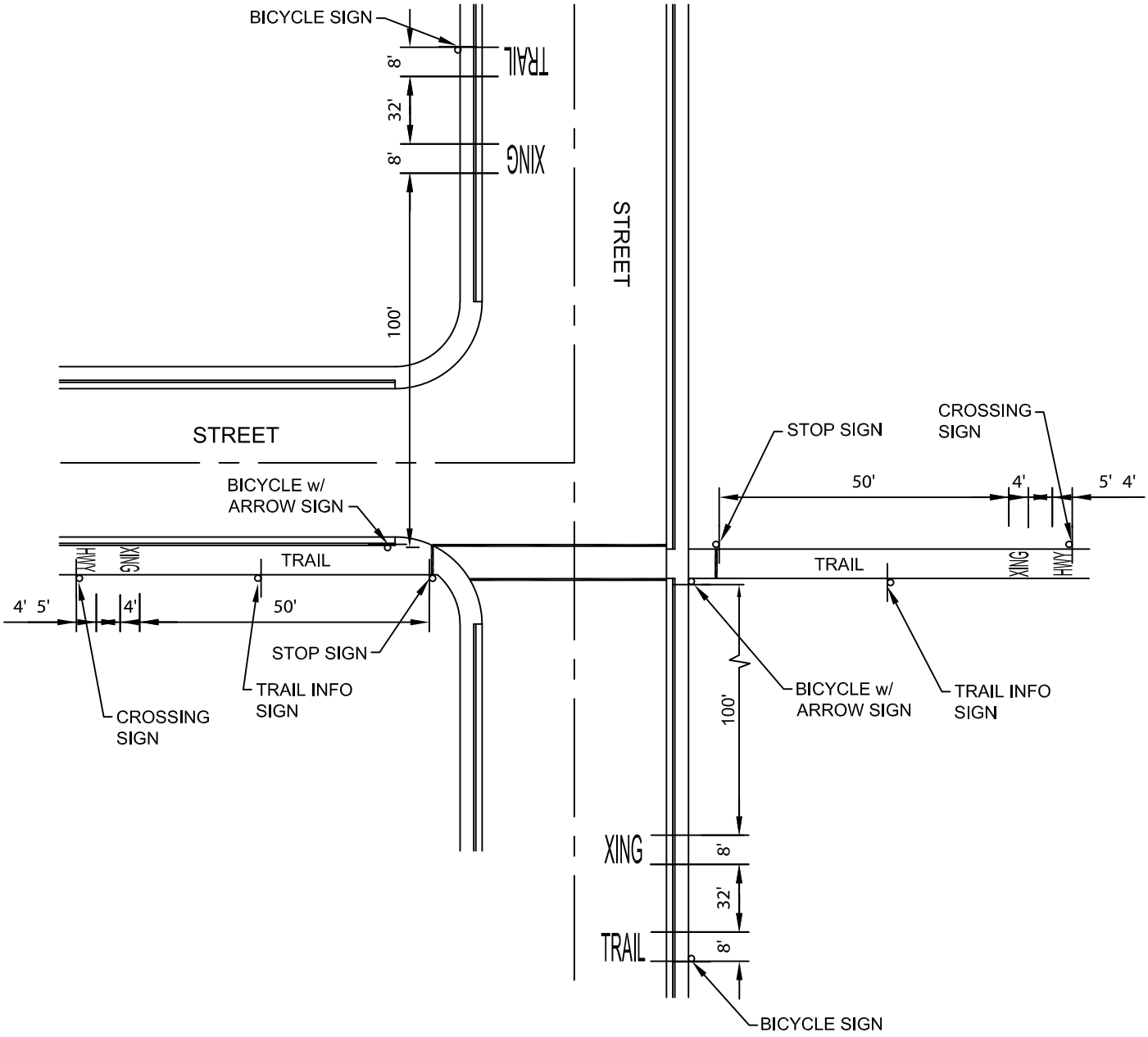

STREET / TRAIL CROSSING STANDARD DETAIL

N.T.S.

ENOCH CITY
900 EAST MIDVALLEY RD
Enoch, UT 84721
Tel. (435) 586-1119

Copyright © 2019

STREET/TRAIL CROSSING
STANDARD DETAIL

SCALE:
N.T.S.

DATE:
FEB. 2019

DETAIL No.:
R18.1

SHEET:
1 of 2

NOTE: ALL SIGN FACE MATERIALS, COLORS, LETTERS, INSTALLATION, ETC. SHALL CONFORM TO CITY ENGINEERING STANDARD DRAWING R-11

TRAIL SIGN FACE DETAIL

N.T.S.

ENOCH CITY
900 EAST MIDVALLEY RD
Enoch, UT 84721
Tel. (435) 586-1119

Copyright © 2019

STREET/TRAIL CROSSING STANDARD DETAIL

SCALE: N.T.S.

DATE: FEB. 2019

DETAIL No.: R18.2

SHEET: 2 of 2

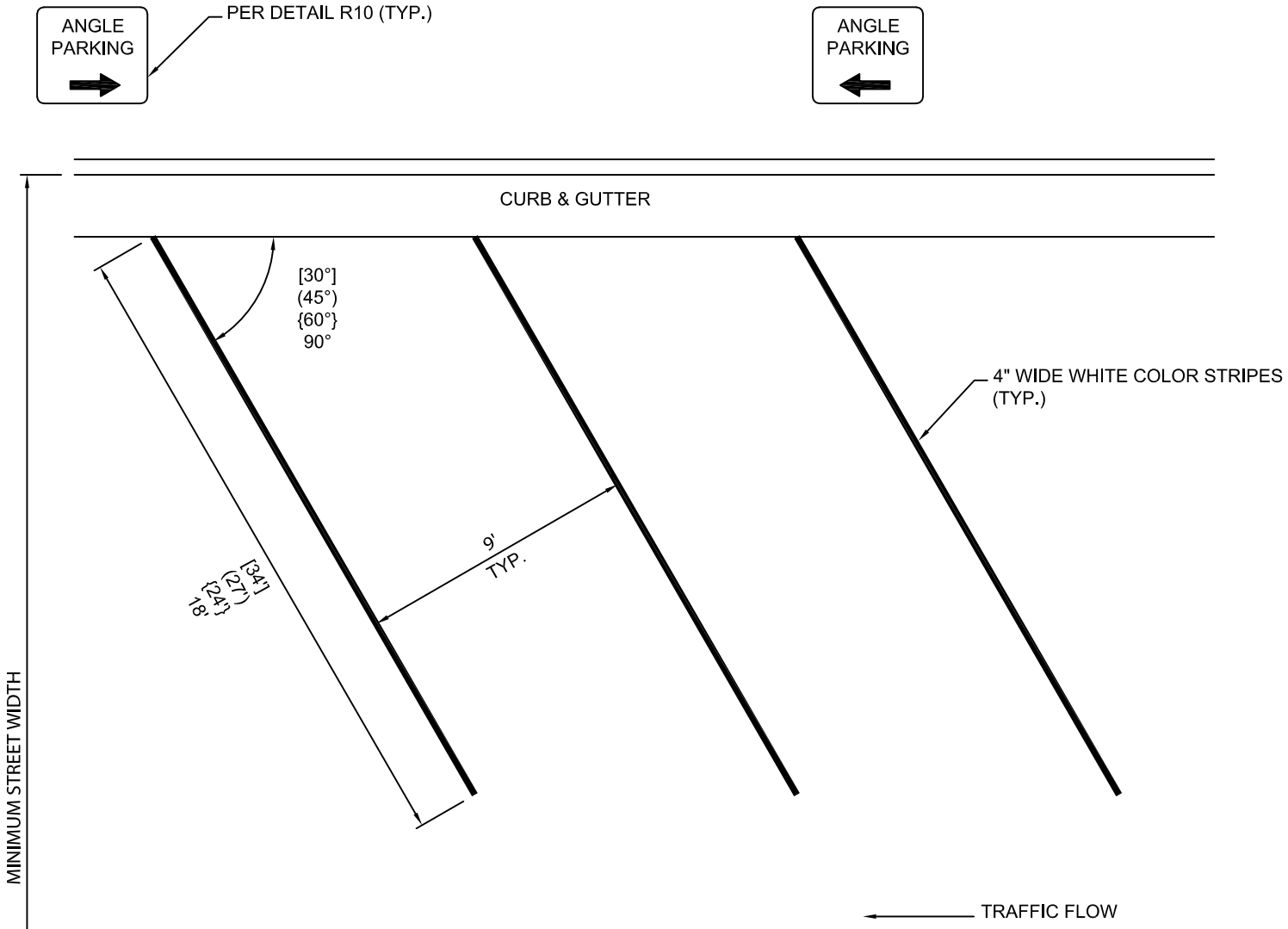

MINIMUM STREET WIDTH (FACE OF CURB TO FACE OF CURB)

TWO WAY STREETS 67' WITH ANGLE PARKING ON BOTH SIDES OF STREET
58' WITH ANGLE PARKING ON ONE SIDE & PARALLEL PARKING ON OPPOSITE SIDE.

ONE WAY STREETS 45' WITH ANGLE PARKING ON ONE SIDE & PARALLEL PARKING ON OPPOSITE SIDE.
36' WITH ANGLE PARKING ON ONE SIDE & NO PARKING ON OPPOSITE SIDE

NOTES:

SEE ANGLE PARKING ORDINANCE FOR OTHER REQUIREMENTS FOR ANGLE PARKING.

ANGLE PARKING STALL PAVEMENT MARKING DETAIL

N.T.S.

ENOCH CITY
900 EAST MIDVALLEY RD
Enoch, UT 84721
Tel. (435) 586-1119

Copyright © 2019

ANGLE PARKING STALL PAVEMENT MARKING DETAIL

SCALE: N.T.S.

DATE: FEB. 2019

DETAIL No.: R19

SHEET: 1 of 1

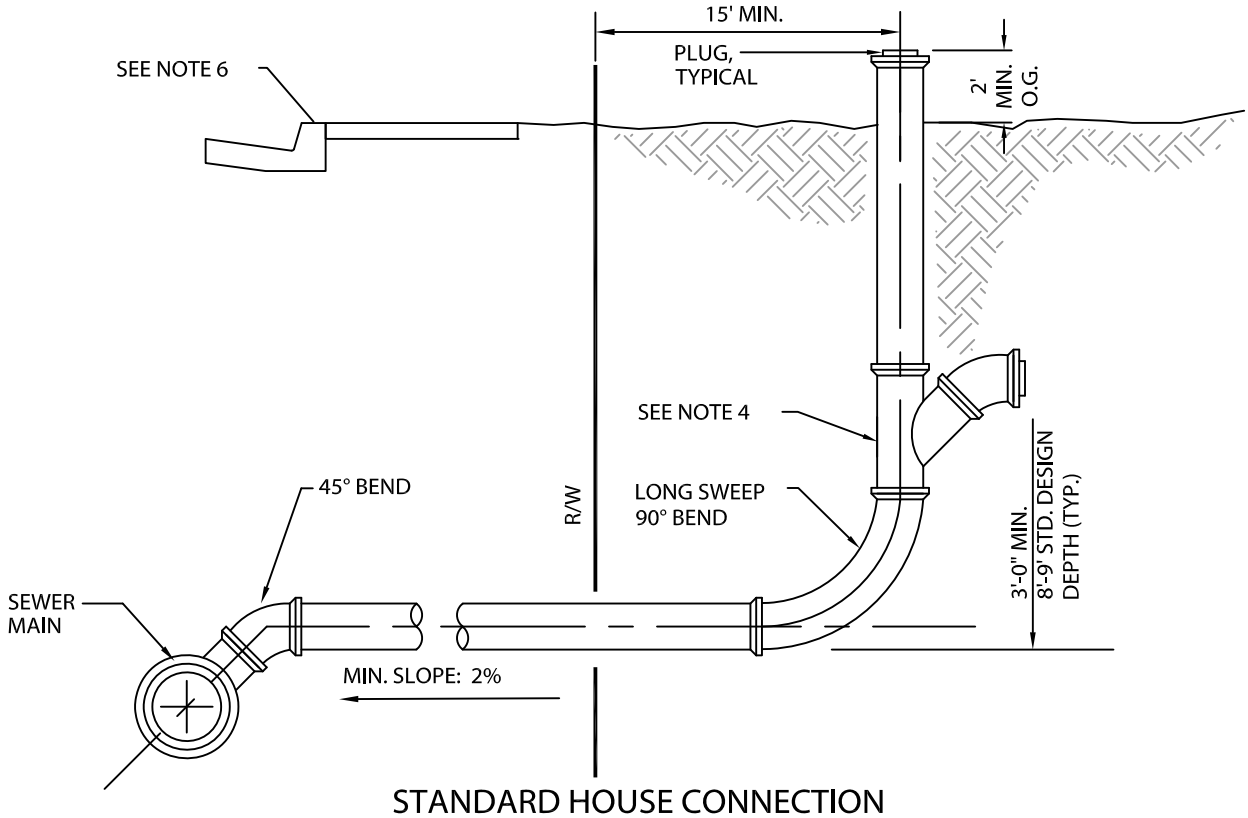

STANDARD HOUSE CONNECTION

N.T.S.

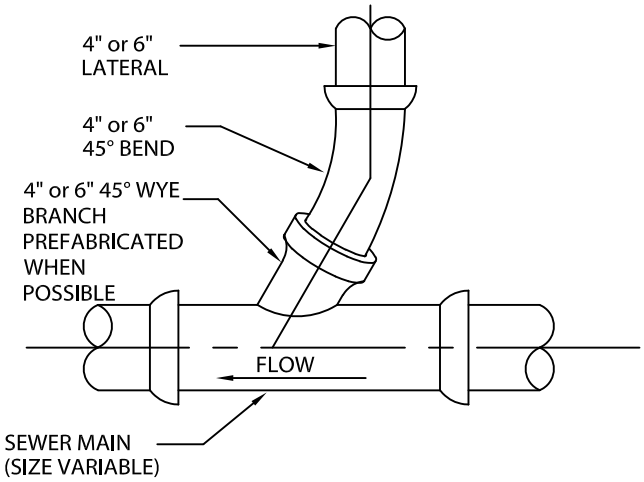

STANDARD WYE

N.T.S.

NOTES:

1. APPROVED INSERTABLE TEES w/ RUBBER GROMMET SEAL OR PVC SADDLE WYES GLUED & STRAPPED TO EXISTING PVC MAINS ALLOWED. SADDLE WYES CONNECTING TO VITRIFIED CLAY SEWER PIPE MAIN MUST BE ENCASED IN CONCRETE AS SHOWN.
2. ALL SEWER LATERALS TO BE ABS OR PVC 4" OR 6" DIAMETER MATERIAL SDR-35.
3. WHERE CLEARANCE BETWEEN BOTTOM OF OBSTRUCTION AND TOP OF LATERAL IS LESS THAN 12" ENCASE LATERAL IN CONCRETE.
4. 4" OR 6" PVC WYE INSTALLED BY BUILDING PLUMBER AT REQUIRED ELEVATIONS.
5. SEWER LATERALS SHALL NORMALLY BE PLACED 10 FEET INSIDE THE SIDE LOT LINE ON THE SIDE WHERE THE SEWER MAIN IS THE LOWEST. ON TWIN HOME LOTS SEWER LATERAL SHALL BE PLACED 1' ON EACH SIDE OF THE LINE DIVIDING THE HOMES.
6. 4" HIGH LETTER "S" ETCHED IN CONCRETE CURB ABOVE SEWER LATERAL.
7. NO SEWER LATERALS SHALL BE CONNECTED DIRECTLY TO SEWER MANHOLES.
8. WHEN A NEW SEWER LATERAL REPLACES AN EXISTING SEWER LATERAL AT A DIFFERENT LOCATION ON THE SEWER MAIN, THE EXISTING SEWER LATERAL SHALL BE CAPPED AT THE SEWER MAIN.

ENOCH CITY
900 EAST MIDVALLEY RD
Enoch, UT 84721
Tel. (435) 586-1119

Copyright © 2019

SEWER LATERAL

SCALE: N.T.S.

DATE: FEB. 2019

DETAIL No.: S1.1

SHEET: 1 of 1

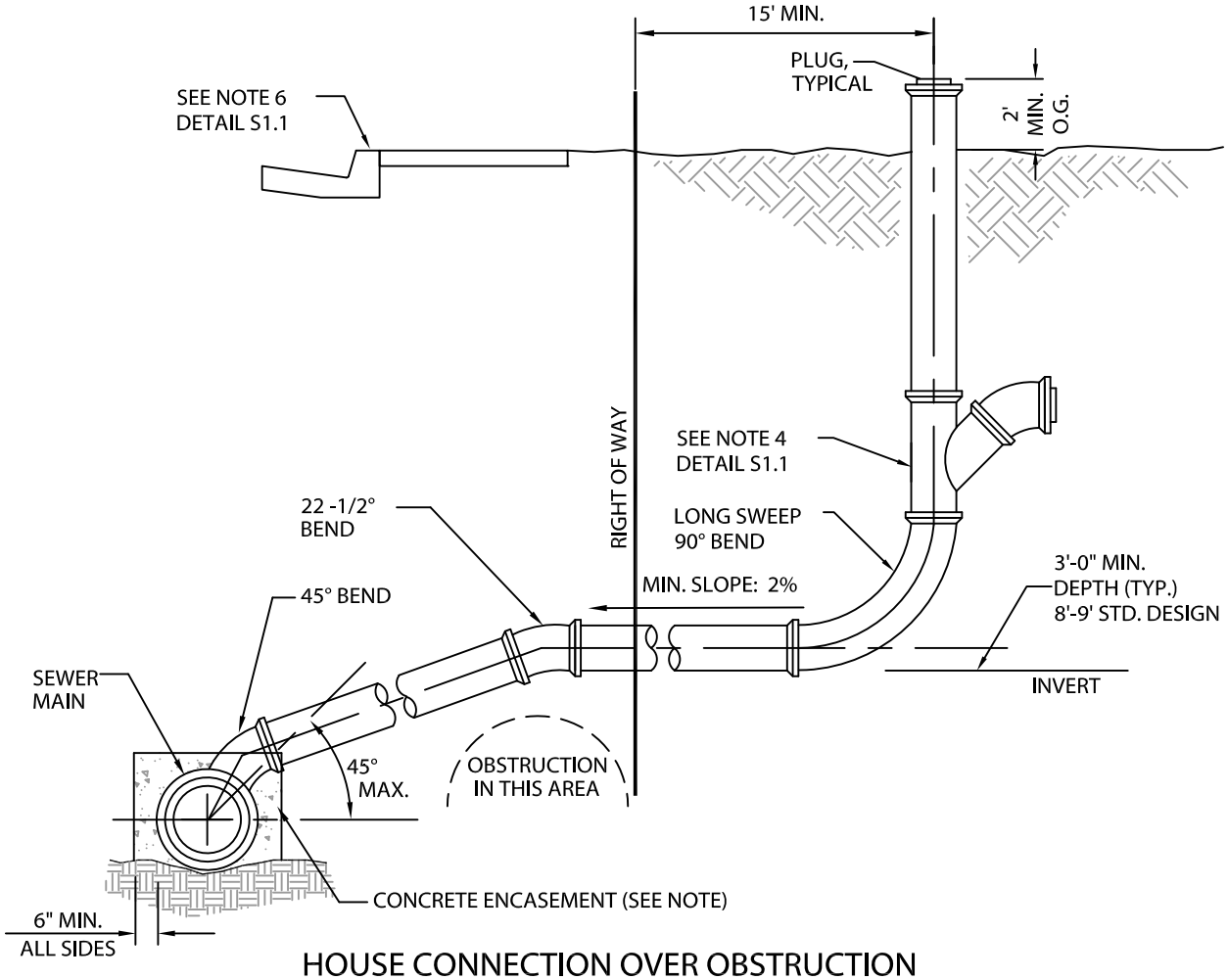

HOUSE CONNECTION OVER OBSTRUCTION
(UPON APPROVAL ONLY)

N.T.S.

ENOCH CITY
900 EAST MIDVALLEY RD
Enoch, UT 84721
Tel. (435) 586-1119

Copyright © 2019

SEWER LATERAL

SCALE: N.T.S.

DATE: FEB. 2019

DETAIL No.: S1.2

SHEET: 1 of 1

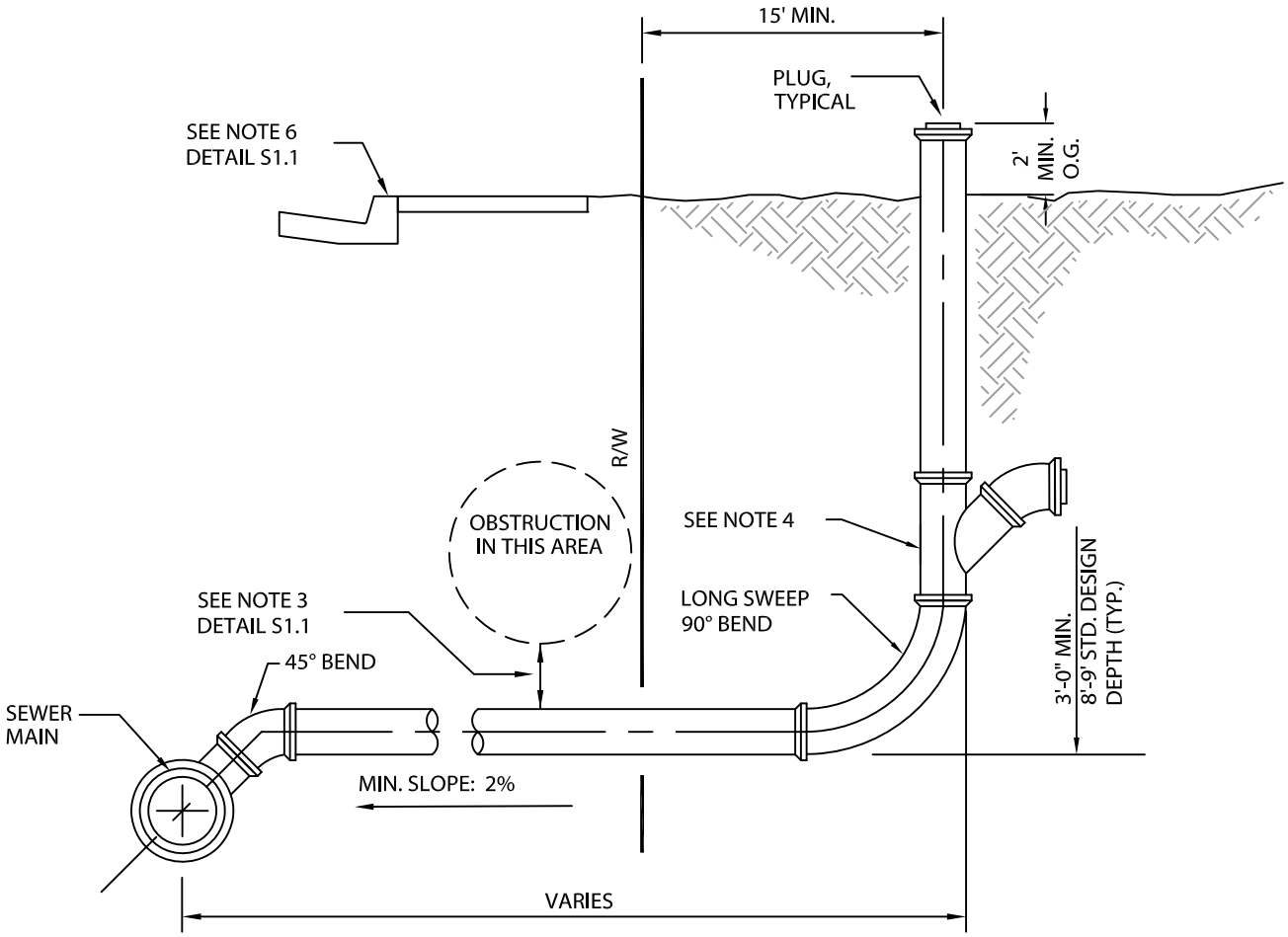

HOUSE CONNECTION UNDER OBSTRUCTION
(UPON APPROVAL ONLY)

N.T.S.

ENOCH CITY

ENOCH CITY
900 EAST MIDVALLEY RD
Enoch, UT 84721
Tel. (435) 586-1119

Copyright © 2019

SEWER LATERAL

SCALE:
N.T.S.

DATE:
FEB. 2019

DETAIL No.:
S1.3

SHEET:
1 of 1

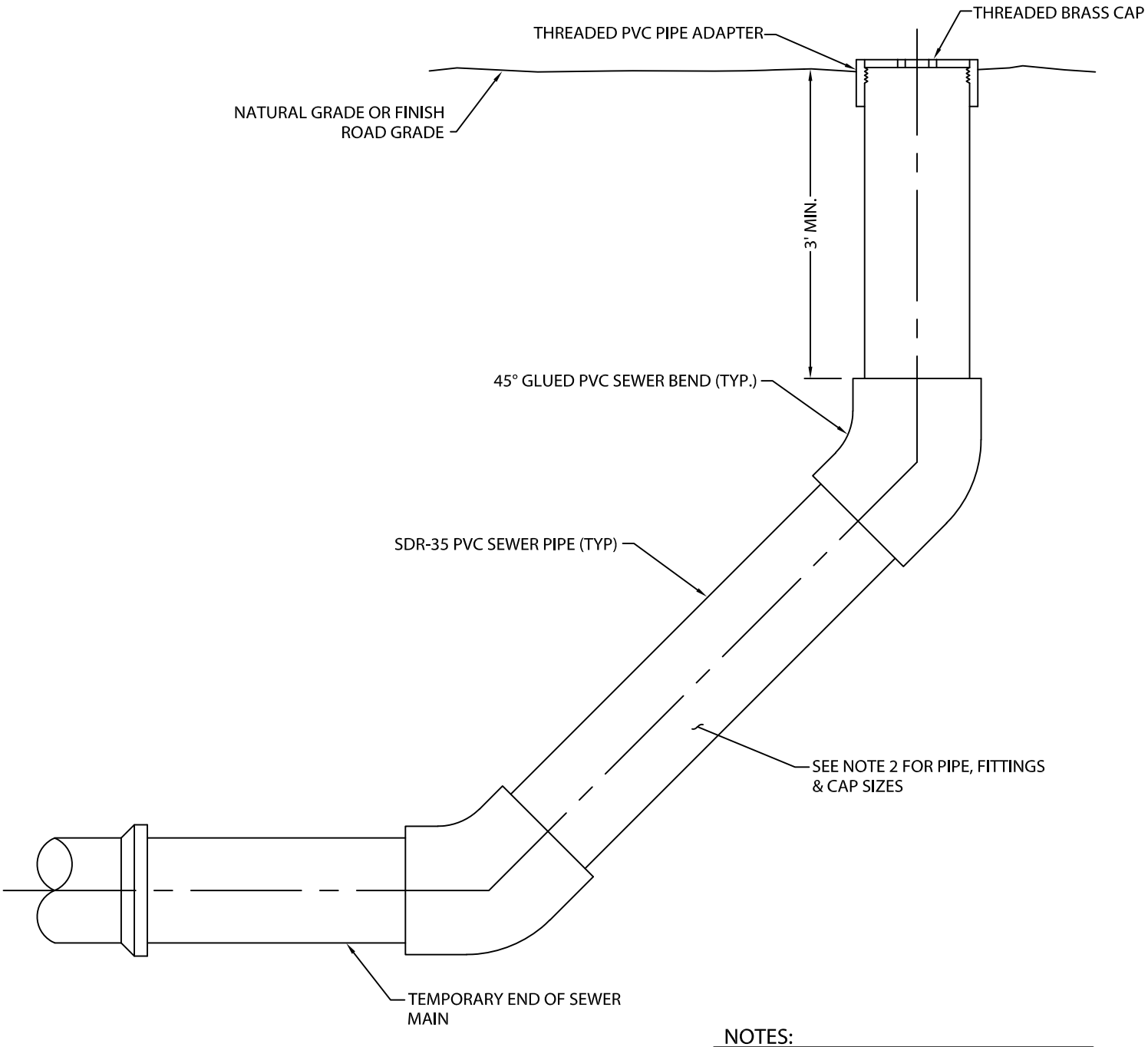

NOTES:

1. PERMENENT ENDS OF SEWER MAIN SHALL HAVE A SEWER MANHOLE PER DETAIL S2.

2. THE DIAMETER OF ALL PIPE, FITTINGS AND CAP OF THE TEMPORARY SEWER CLEAN-OUT SHALL BE THE SAME DIAMETER OF THE SEWER MAIN LINE.

TEMPORARY SEWER MAIN CLEAN-OUT DETAIL

N.T.S.

ENOCH CITY
900 EAST MIDVALLEY RD
Enoch, UT 84721
Tel. (435) 586-1119

Copyright © 2019

TEMPORARY SEWER MAIN CLEAN-OUT

SCALE: N.T.S.

DATE: FEB. 2019

DETAIL No.: S10

SHEET: 1 of 1

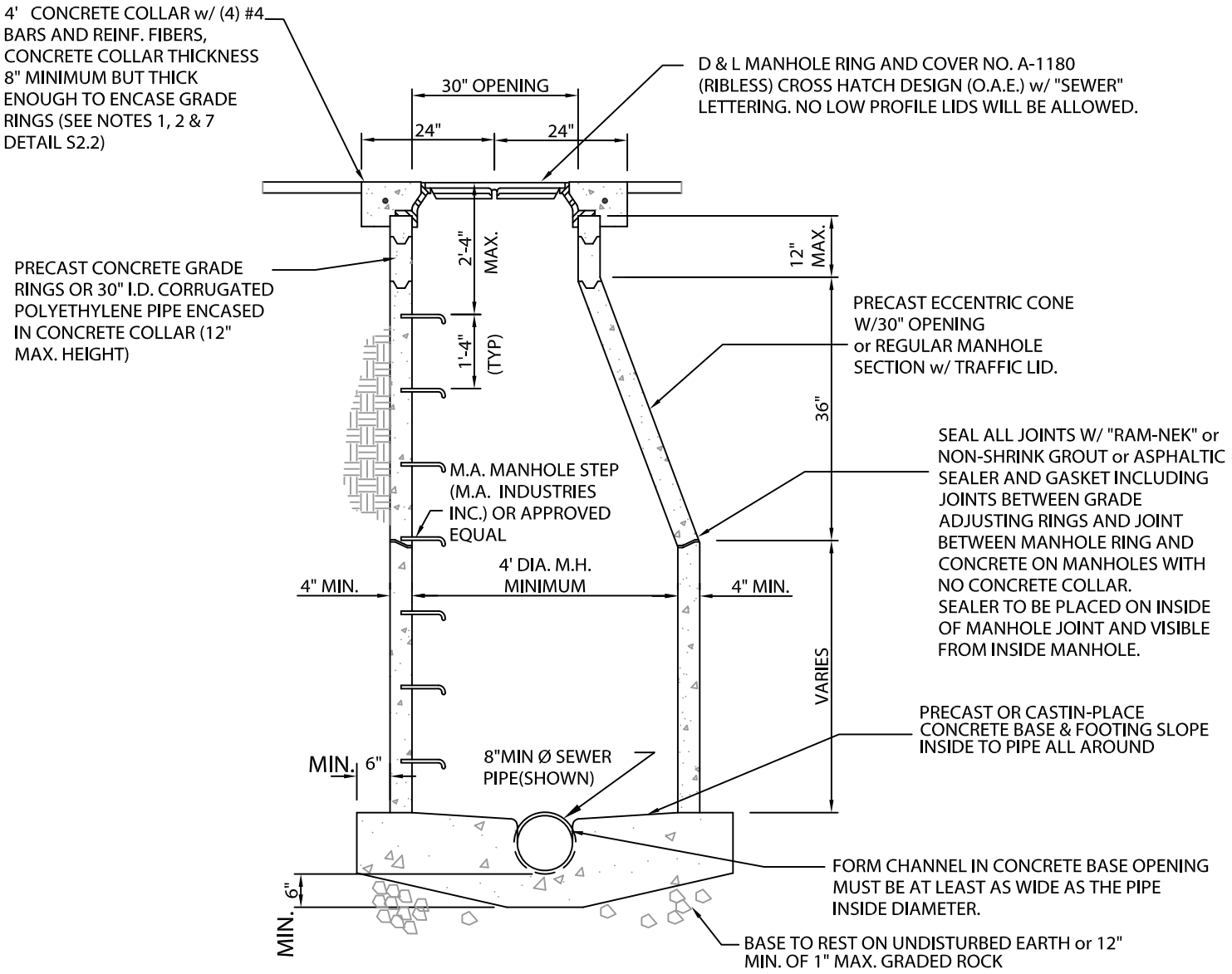

SECTION

N.T.S.

TYPICAL MANHOLE FOR SANITARY SEWER

N.T.S.

ENOCH CITY
900 EAST MIDVALLEY RD
Enoch, UT 84721
Tel. (435) 586-1119

NEW SEWER MANHOLE & EXISTING CONNECTION

SCALE: N.T.S.

DATE: FEB. 2019

DETAIL No.: S2.1

SHEET: 1 of 2

Copyright © 2019

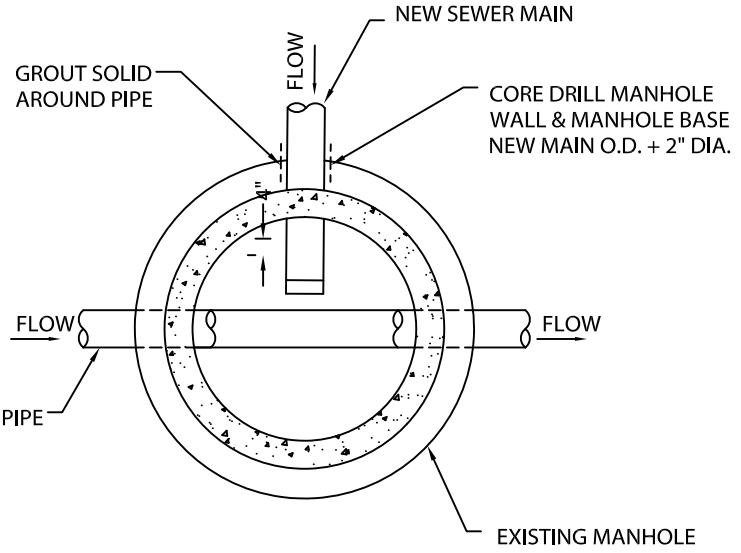

PLAN

N.T.S.

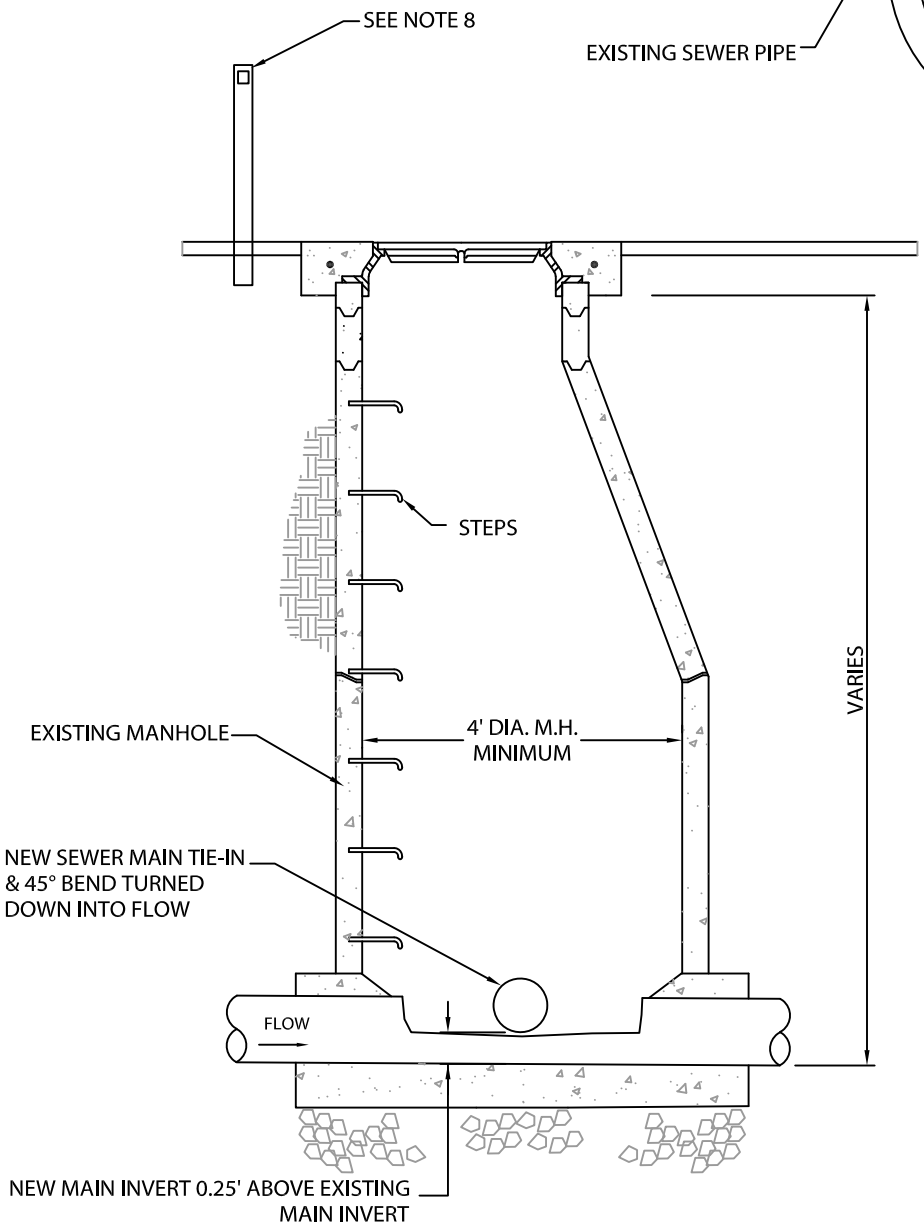

SECTION

N.T.S.

EXISTING SEWER MANHOLE CONNECTION

N.T.S.

NOTES:

1. MANHOLES IN ROADWAYS REQUIRE CONC. COLLAR. TOP OF MANHOLE CONE IN UNIMPROVED AREAS SHALL BE SET 6" TO 12" ABOVE FINISH GRADE WITH NO GRADE RINGS. (NO CONC. COLLAR REQ'D)
2. MANHOLE LID, RING AND CONCRETE COLLAR TO BE CENTERED ON MANHOLE OPENING AND SET ¼ INCH BELOW TOP OF ASPHALT.
3. 5' DIA. MANHOLES REQUIRED FOR ALL SEWER LINES OVER 15" DIA, OVER 12' DEEP MANHOLE OR 3 OR MORE IN COMING LINES.
4. NO SEWER LATERALS SHALL BE INSTALLED IN MANHOLES.
5. OUTLET PIPE INVERT TO BE 0.05' (MINIMUM) LOWER THAN INLET PIPES IN ALL MANHOLES.
6. NO WOOD OR PVC SHIMS WILL BE ALLOWED BETWEEN LID RING AND ADJUSTING RINGS OR MANHOLE.
7. IF TRAFFIC LID IS USED, CONCRETE COLLAR CAN BE ELIMINATED IF TRAFFIC LID IS < 6" BELOW FINISHED ROAD GRADE.
8. MANHOLES IN UNIMPROVED AREAS REQUIRE AN ORANGE CARSONITE CRM 66" UTILITY MARKER BE PLACED WITHIN 4' OF THE MANHOLE WITH A STICKER INDICATING SEWER MANHOLE.
9. DROP MANHOLE WITH PRESSURE LINE OR GRAVITY LINES 15" DIAMETER AND ABOVE SHALL BE CORROSION RESISTANT, ARMOR ROCK O.A.E.

ENOCH CITY
900 EAST MIDVALLEY RD
Enoch, UT 84721
Tel. (435) 586-1119

Copyright © 2019

NEW SEWER MANHOLE & EXISTING CONNECTION

SCALE: N.T.S.

DATE: FEB. 2019

DETAIL No.: S2.2

SHEET: 2 of 2

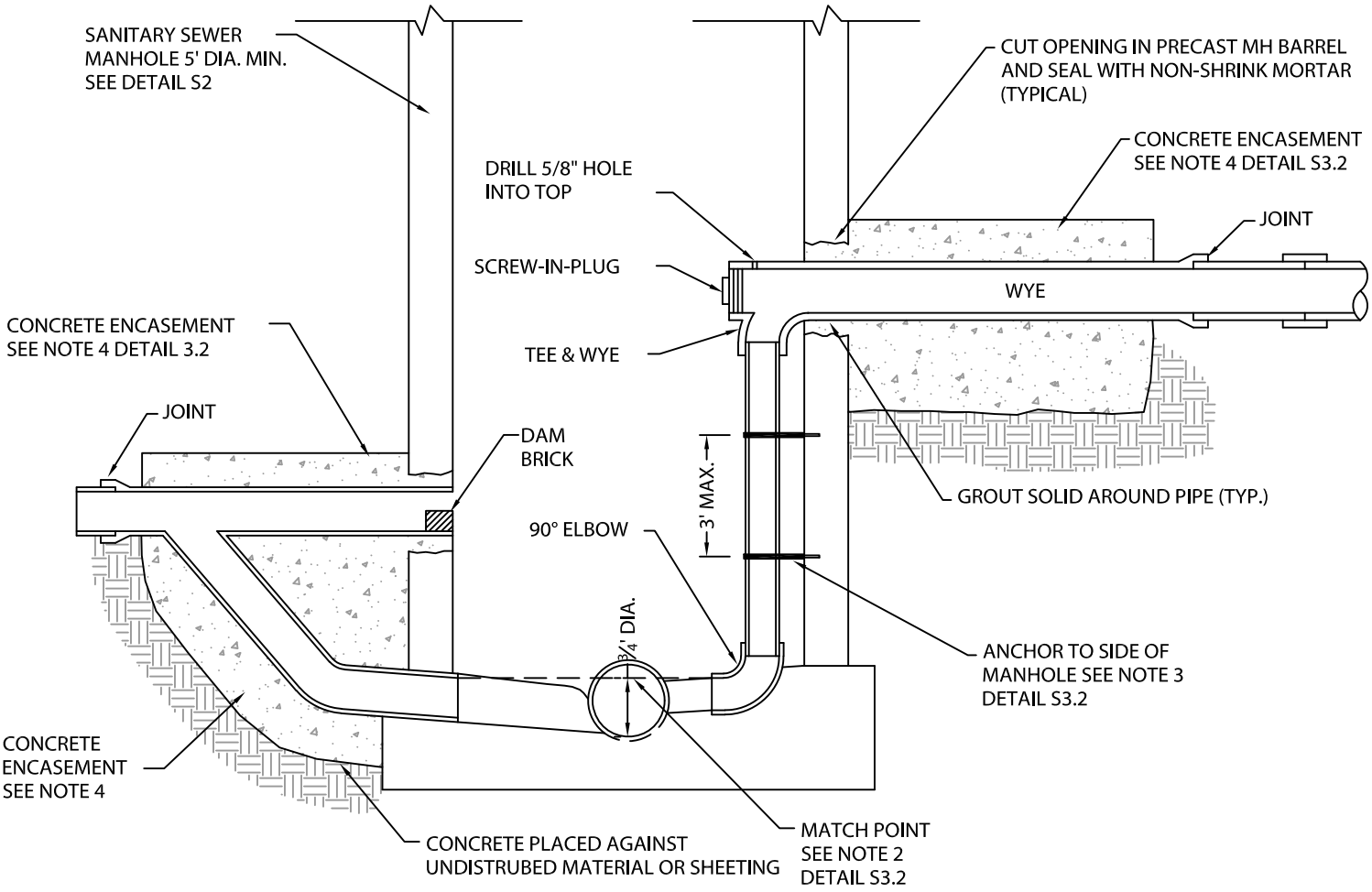

ALTERNATE 1	ALTERNATE 2
SHALLOW DROP (TYP) < 5' 4' DIA. MANHOLE REQ'D	DEEP DROP (TYP) > 5' 5' DIA. MANHOLE REQ'D

SECTION

N.T.S.

ENOCH CITY
900 EAST MIDVALLEY RD
Enoch, UT 84721
Tel. (435) 586-1119

Copyright © 2019

DROP MANHOLE

SCALE:
N.T.S.

DATE:
FEB. 2019

DETAIL No.:
S3.1

SHEET:
1 of 2

NOTES:

1. PIPE DROPS: ONLY ONE DROP PIPE IS ALLOWED INSIDE THE MANHOLE. SIZE THE DROP PIPE TO BE SAME DIAMETER AS SEWER PIPE DISCHARGING INTO MANHOLE.

2. MATCH POINT: MATCH THE 3/4 DIAMETER POINTS OF THE PIPES.

3. ANCHOR: IF THE DROP IS MORE THAN 18 INCHES, ANCHOR THE RISER TO THE WALL EVERY 36 INCHES. USE CONCRETE ANCHORS 1-1/2" THREADED RODS, AWI PIPE HANGERS w/ 1/2" COUPLING & POLY PROYLENE COLLAR. ALL STEEL SHALL BE 304 STAINLESS.

4. CONCRETE: CLASS C PER TABLE 4.10. EXTEND ENCASEMENT TO FIRST JOINT BEYOND EXCAVATION FOR DROP CONNECTION.

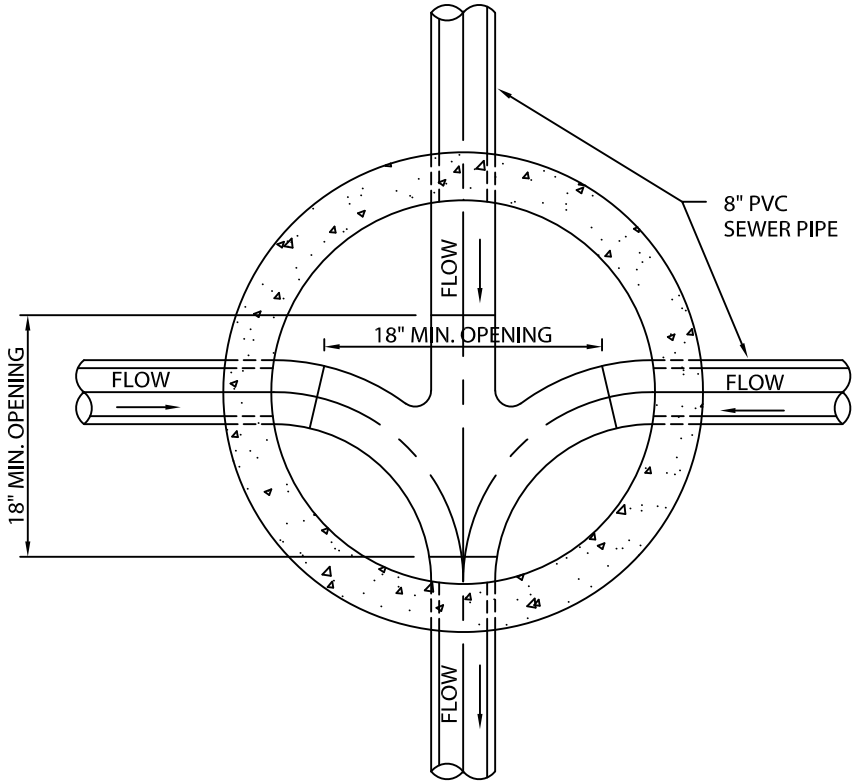

PLAN

N.T.S.

ENOCH CITY

900 EAST MIDVALLEY RD
Enoch, UT 84721
Tel. (435) 586-1119

Copyright © 2019

DROP MANHOLE

SCALE:
N.T.S.

DATE:
FEB. 2019

DETAIL No.:
S3.2

SHEET:
2 of 2

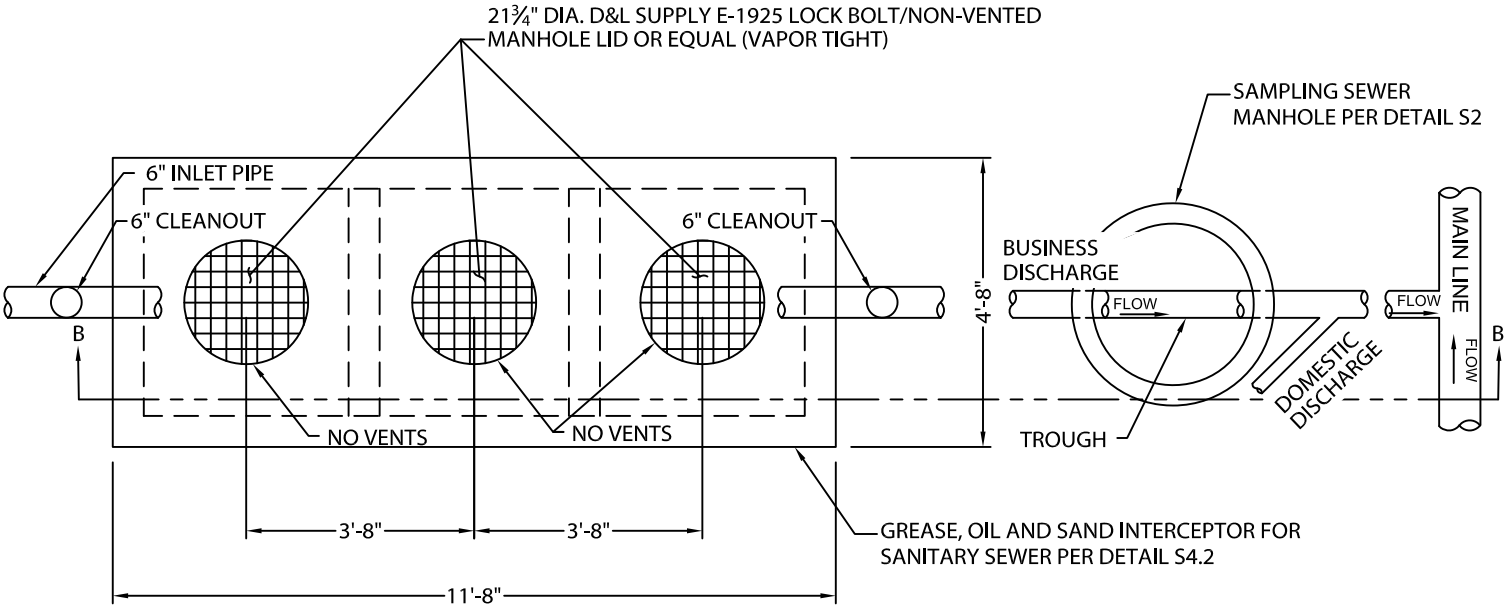

TOP VIEW

N.T.S.

SAMPLING MANHOLE FOR SANITARY SEWER

N.T.S.

SAMPLING MANHOLE NOTES:

1. MANHOLES IN ROADWAYS OR PARKING LOTS REQUIRE CONC. COLLAR. MANHOLES IN UNIMPROVED AREAS SHALL BE SET 6" ABOVE. FINISH GRADE. (NO CONC. COLLAR REQ'D)
2. MANHOLE LID, RING AND CONCRETE COLLAR TO BE SET ¼" BELOW TOP OF ASPHALT.

ENOCH CITY
900 EAST MIDVALLEY RD
Enoch, UT 84721
Tel. (435) 586-1119

Copyright © 2019

GREASE, OIL, & SAND INTERCEPTOR & SAMPLING MANHOLE FOR SANITARY SEWER

SCALE: N.T.S.

DATE: FEB. 2019

DETAIL No.: S4.1

SHEET: 1 of 2

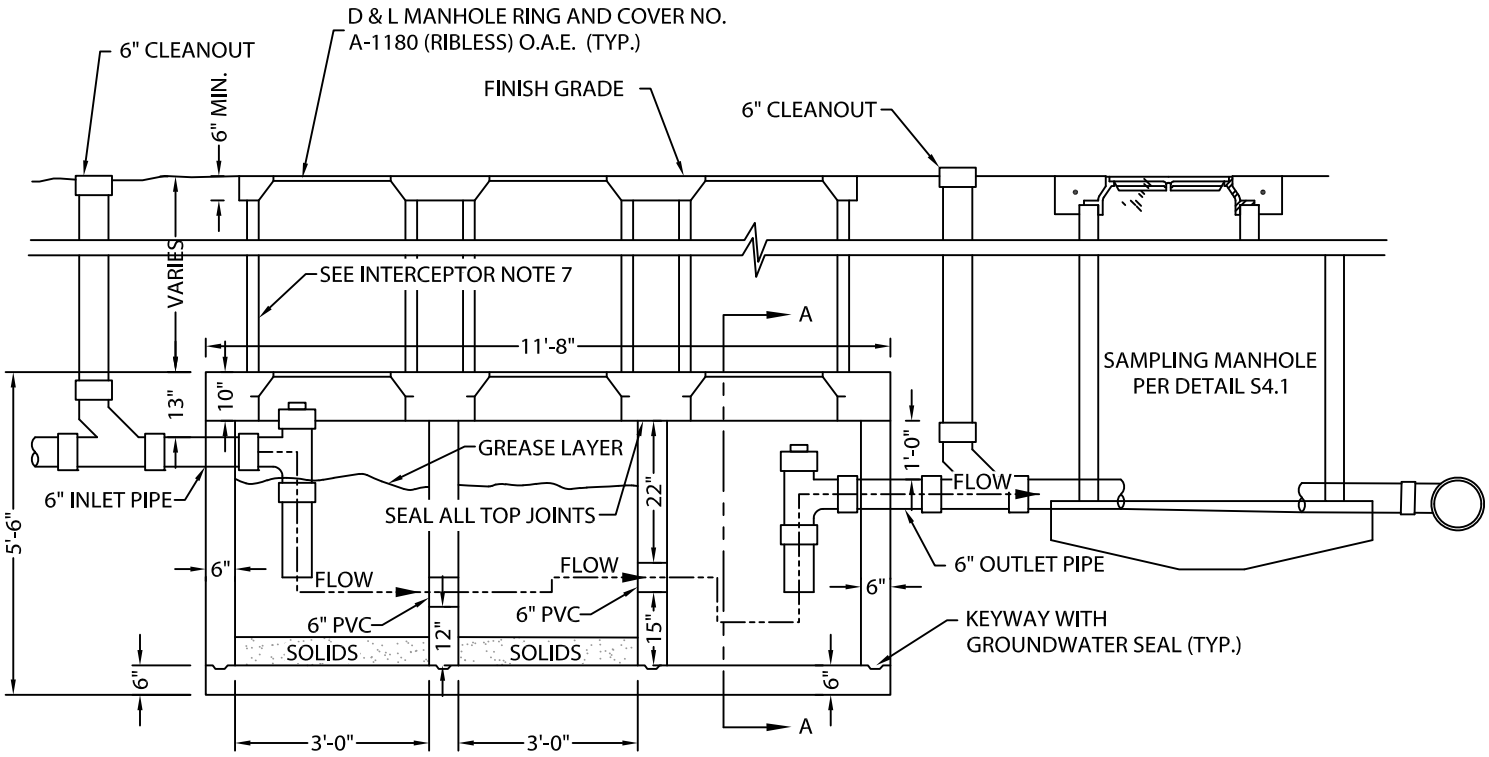

SECTION B-B

N.T.S.

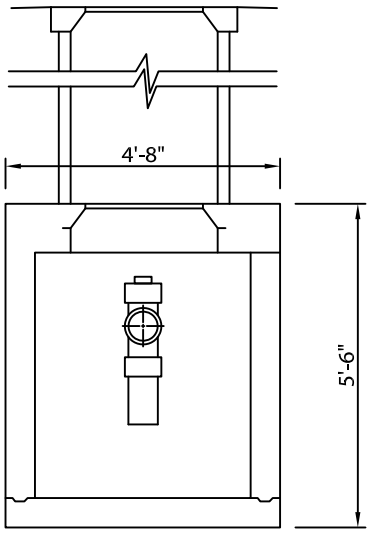

SECTION A-A

N.T.S.

INTERCEPTOR NOTES:

1. MATERAL SPEC'S:

   1.A. CONCRETE PORTLAND CEMENT TYPE II. MINIMUM COMPRESSIVE STRENGTH=4000 PSI AT 28 DAYS.

   1.B. REINFORCING BAR INTERMEDIATE GRADE 40 ASTM A615.

   1.C. REINFORCING WELDED WIRE MESH ASTM A185.

2. UNIT COATED OUTSIDE WITH AN APPROVED PROTECTIVE COATING.

3. ALL DIMENSIONS ± NOT TO BE USED FOR CONSTRUCTION PURPOSES UNLESS CERTIFIED.

4. PRECAST UNIT TO BE PLACED ON NATURAL SOIL OR APPROVED COMPACTED FILL.

5. STANDARD GROUND WATER SEAL-BUTYL ROPE MASTIC OR CEMENT MORTAR.

6. INTERCEPTOR MANHOLE COVERS TO BE SET FLUSH WITH ASPHALT OR CONCRETE PARKING LOT GRADES OR 6" MIN. ABOVE GRADE IN UNFINISHED OR LANDSCAPE AREAS.

7. RAISE COVERS TO FINISHED GRADE WITH 30" I.D. CONCRETE OR HDPE PIPE (TYP)

GREASE, OIL & SAND INTERCEPTOR DETAIL

N.T.S.

ENOCH CITY
900 EAST MIDVALLEY RD
Enoch, UT 84721
Tel. (435) 586-1119

Copyright © 2019

GREASE, OIL, & SAND INTERCEPTOR & SAMPLING MANHOLE FOR SANITARY SEWER

SCALE: N.T.S.

DATE: FEB. 2019

DETAIL No.: S4.2

SHEET: 2 of 2

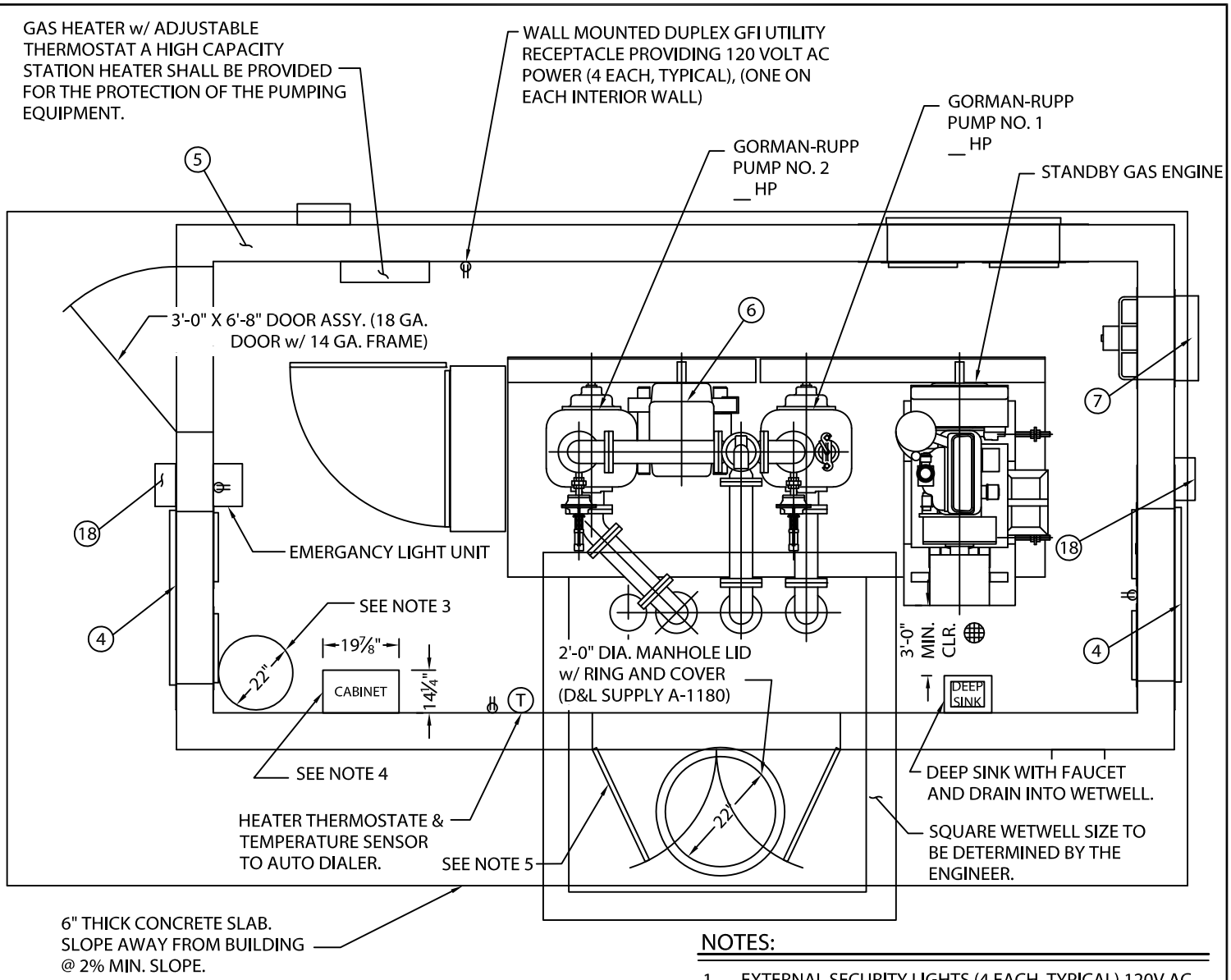

PLAN VIEW

N.T.S.

NOTES:

1. EXTERNAL SECURITY LIGHTS (4 EACH, TYPICAL) 120V AC PHOTOELECTRIC HIGH PRESSURE SODIUM LIGHT, MOUNTED AND WIRED TO EXTERIOR WALL (ONE ON EACH EXTERIOR WALL.)
2. 4" FLOOR DRAIN. DRAIN INTO WETWELL. SLOPE CONCRETE FLOOR INSIDE THE BUILDING TO THE FLOOR DRAIN.
3. PROVIDE TRASH CAN (RUBBERMAID 32 GAL. BRUTE ROUND BASE w/ BRUTE DOME TOP - GRAY COLOR)
4. WALL-MOUNTED STEEL STORAGE CABINET (DURHAM MODEL 056) 2 ADJUSTABLE SHELVES. RUST AND ACID-RESISTANT BAKED ENAMEL FINISH.
5. DOUBLE-WIDE ENTRANCE DOOR 6'-0" X 6'-8" DOOR ASSEMBLY WITHOUT A CENTER SILL. (18 GA. DOOR W/ 14 GA. FRAME) w/ PUSH PULL HARDWARE, DEAD BOLT & 3 HINGES.
6. SEE DETAIL S5.4 FOR CONSTRUCTION NOTES.
7. SEE DETAIL S5.5 FOR GENERAL NOTES.

ENOCH CITY
900 EAST MIDVALLEY RD
Enoch, UT 84721
Tel. (435) 586-1119

SELF PRIMING SEWER LIFT STATION

SCALE: N.T.S.

DATE: FEB. 2019

DETAIL No.: S5.1

SHEET: 1 of 5

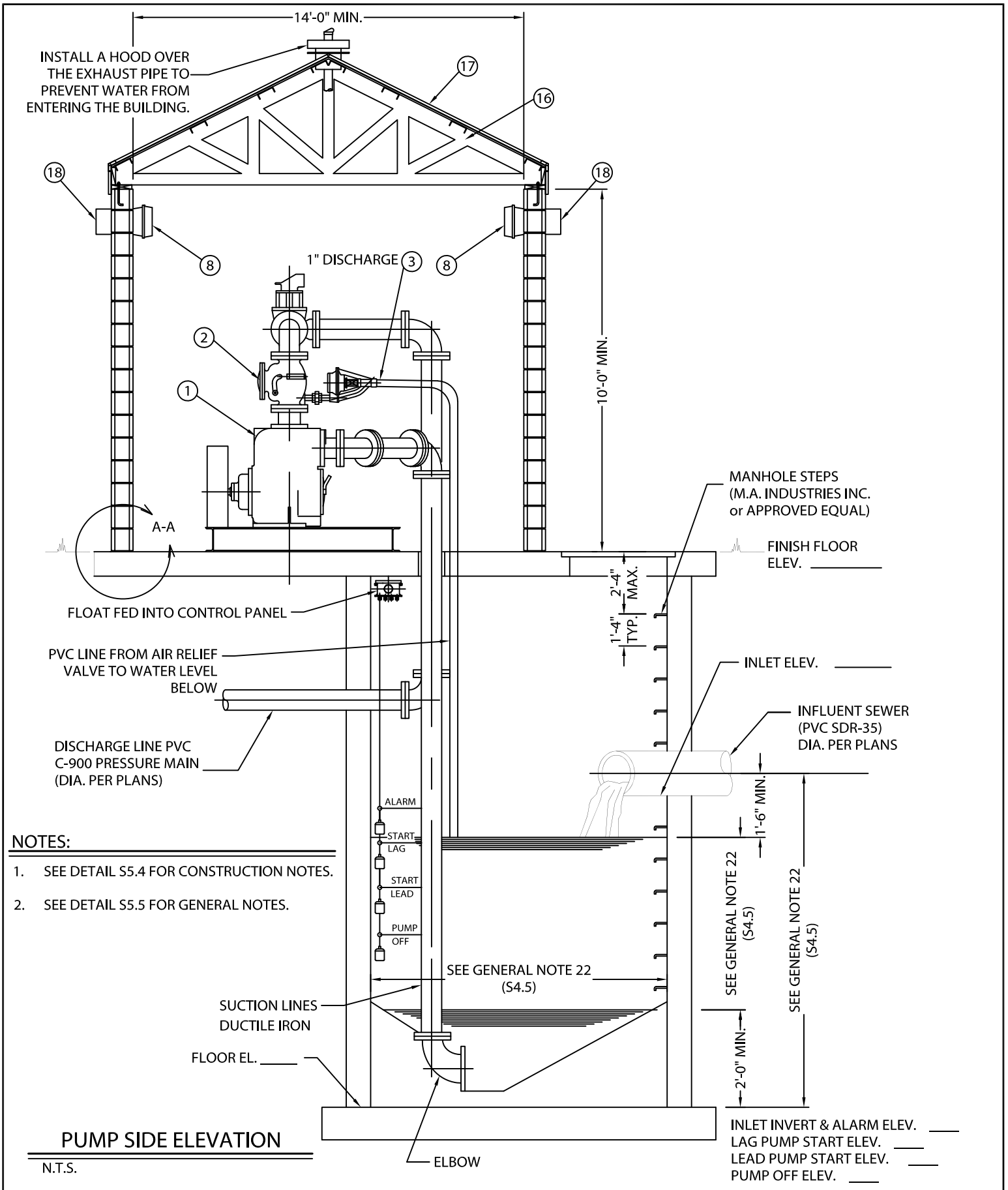

NOTES:

1. SEE DETAIL S5.4 FOR CONSTRUCTION NOTES.
2. SEE DETAIL S5.5 FOR GENERAL NOTES.

PUMP SIDE ELEVATION

N.T.S.

ENOCH CITY

ENOCH CITY
900 EAST MIDVALLEY RD
Enoch, UT 84721
Tel. (435) 586-1119

Copyright © 2019

SELF PRIMING SEWER LIFT STATION

SCALE: N.T.S.

DATE: FEB. 2019

DETAIL No.: S5.2

SHEET: 2 of 5

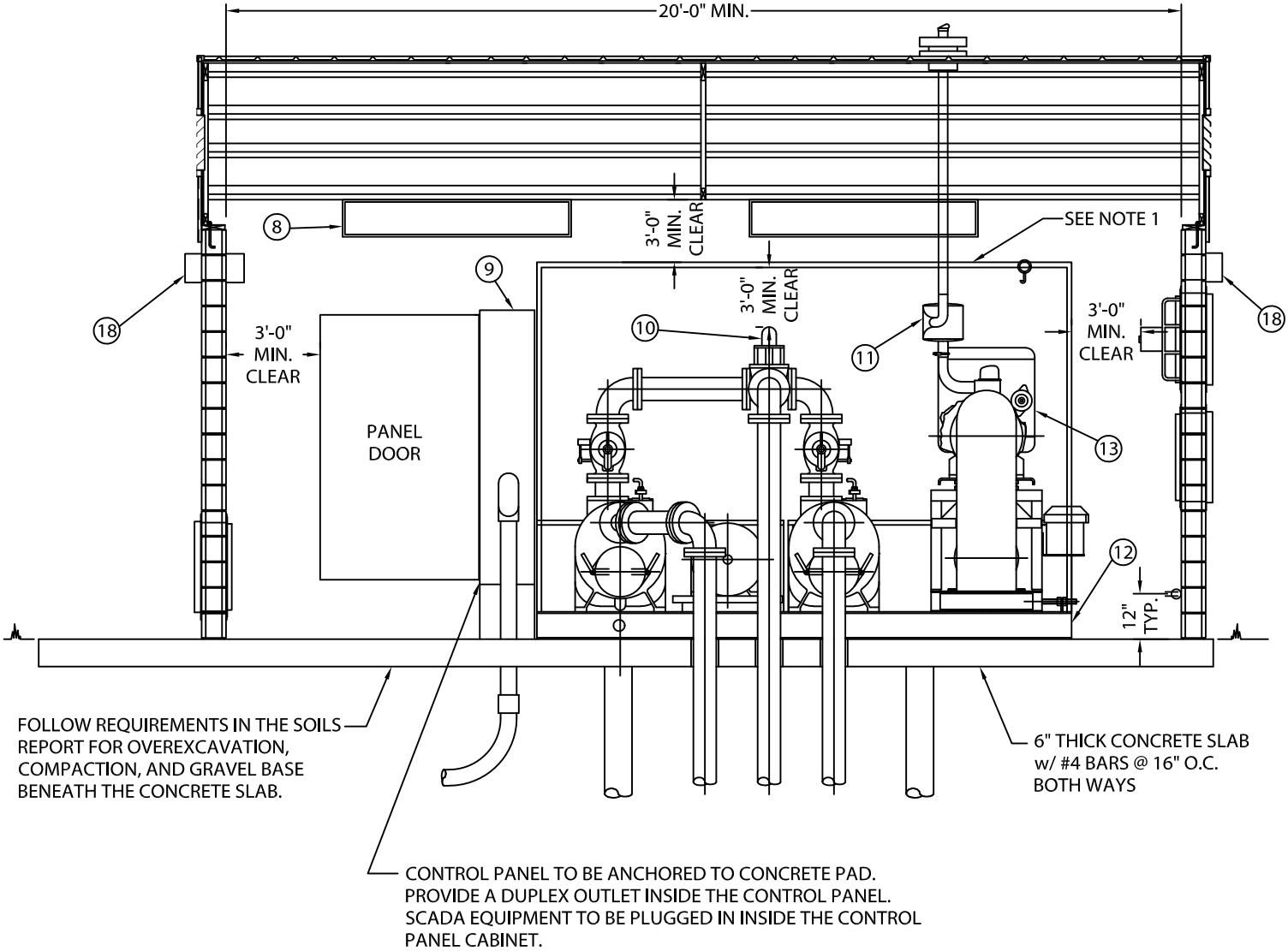

PUMP FRONT ELEVATION

N.T.S.

NOTES:

1. LIFT BEAM FRAME W/ 2 TON TROLLY HOIST MOUNTED TO THE SKIDS. LIFT BEAM SIZE TO BE DETERMINED BY THE ENGINEER. LIFT BEAM MUST BE TALL ENOUGH TO BE ABLE TO LIFT THE PUMPS UP AND OVER THE OTHER EQUIPMENT. LIFT BEAM FRAME TO BE SQUARE STRUCTURAL TUBING WITH MINIMUM 1/2" WALL THICKNESS (ASTM A500, GRADE B, FY = 46 KSI)
2. SEE DETAIL S5.4 FOR CONSTRUCTION NOTES.
3. SEE DETAIL S5.5 FOR GENERAL NOTES.

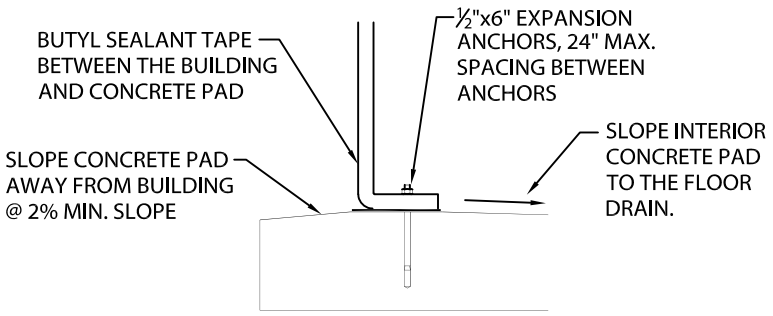

SECTION A-A

N.T.S.

ENOCH CITY
900 EAST MIDVALLEY RD
Enoch, UT 84721
Tel. (435) 586-1119

Copyright © 2019

SELF PRIMING SEWER LIFT STATION

SCALE: N.T.S.

DATE: FEB. 2019

DETAIL No.: S5.3

SHEET: 3 of 5

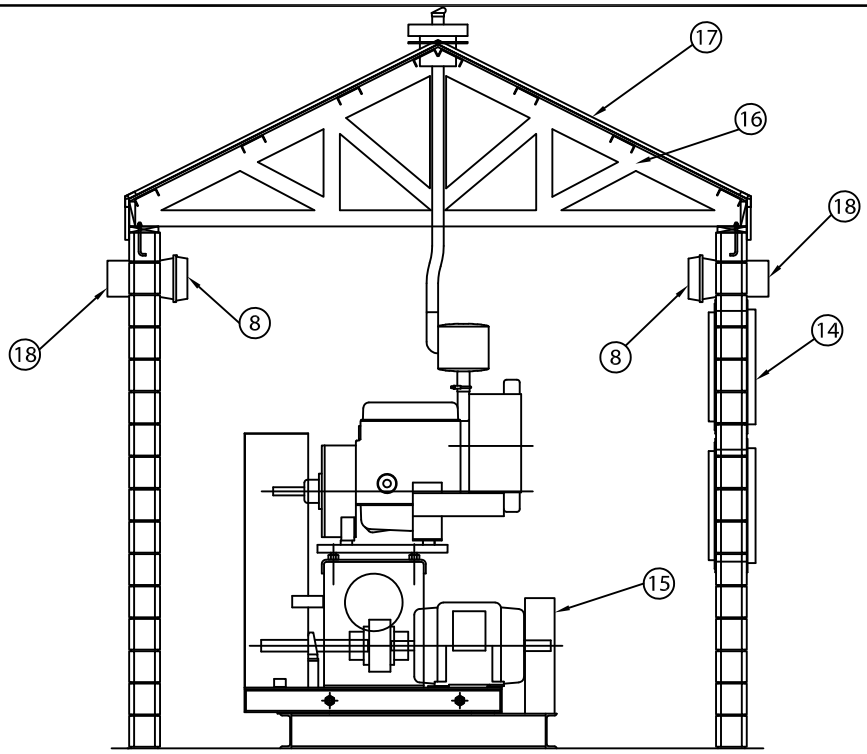

GAS ENGINE SIDE ELEVATION

N.T.S.

CONSTRUCTION NOTES:

ITEM	DESCRIPTION	MATERIAL & SIZE
1	PUMP	CAST IRON T4A-B
2	DISCHARGE CHECK VALVE	CAST IRON
3	AIR RELEASE VALVE	CAST IRON
4	INTAKE VENT ASSY	ALUMINUM (4 SHUTTERS)
5	STATION ENCLOSURE	MASONRY BLOCK
6	MOTOR	CAST IRON
7	EXHAUST FAN ASSY	1600 CFM
8	FLUORESCENT LIGHT FIXTURE	80 WATT FIXTURE
9	CONTROL PANEL	STEEL
10	DISCHARGE PLUG VALVE	CAST IRON 3-WAY
11	EXHAUST SILENCER	STAINLESS STEEL
12	PUMP & MOTOR BASE ASSY	STEEL
13	ENGINE (NISSAN)	LIQUID COOLED
14	EXHAUST VENT ASSY	ALUMINUM (4 SHUTTERS)
15	BELT GUARD ASSY	STEEL
16	ROOF TRUSSES	STEEL
17	METAL INSULATED ROOF w/ FLASHING	STEEL
18	HPS LIGHT FIXTURE	175 WATT

ENOCH CITY
900 EAST MIDVALLEY RD
Enoch, UT 84721
Tel. (435) 586-1119

Copyright © 2019

SELF PRIMING SEWER LIFT STATION

SCALE: N.T.S.

DATE: FEB. 2019

DETAIL No.: S5.4

SHEET: 4 of 5

GENERAL NOTES:

1. NEED 3 PHASE POWER. 480-VOLT w/ CONNECTION FOR AUXILIARY GENERATOR.

2. BETWEEN PUMP SKIDS AND BUILDING FLOOR, VIBRATION ISOLATION PADS SHALL BE INSTALLED. SKIDS SHALL BE ANCHORED TO CONCRETE FLOOR AND VIBRATION ISOLATION PADS SHALL BE INSTALLED IN SMALL ENOUGH PIECES TO FIT UNDER RAILS.

3. THE PUMP STATION PHONE SYSTEM SHALL BE TIED TO THE ENOCH CITY SCADA SYSTEM USING AN AUTO-DIALER PER ENOCH CITY REQUIREMENTS. PROVIDE SUBMITTALS ON ALL AUTO-DIALER EQUIPMENT TO BE USED. THE SCADA SYSTEM MUST INCLUDE AN INTRUSION ALARM ON THE WETWELL MANHOLE LID AND ON THE DOORS INTO THE LIFT STATION BUILDING, BUILDING TEMPERATURE SENSOR, HIGH LEVEL ALARM, MOTOR RUN, MOTOR FAIL ALARM, AND WET WELL LEVEL.

4. ALL CONDUITS AND UTILITIES COMING INTO THE BUILDING MUST COME IN THROUGH THE CONCRETE FLOOR SLAB. NO CONDUITS OR UTILITIES MAY ENTER THE BUILDING THROUGH THE WALLS. A SPARE 2" CONDUIT MUST BE STUBBED INTO THE BUILDING THROUGH THE FLOOR SLAB FOR FUTURE USE.

5. THE WET WELL MUST BE LOCATED FACING THE STREET OR ACCESS ROAD SO THAT IT CAN BE EASILY ACCESSED BY THE CITY'S SEWER CLEANING TRUCK.

6. THE SOIL UNDERNEATH ALL CONCRETE SLABS MUST BE OVER EXCAVATED AND RE-COMPACTED PER THE RECOMMENDATIONS GIVEN IN THE SOILS REPORT.

7. THE CONCRETE SLAB MUST BE DOWELED INTO THE WETWELL WITH #4 REBAR @ 16" O.C. TO PREVENT DIFFERENTIAL SETTLEMENT OF THE SLABS.

8. CULINARY WATER SERVICE MUST BE PROVIDED TO THE LIFT STATION SITE. INSTALL A FROST PROOF YARD HYDRANT ON THE SITE WITH 3 FEET BURY DEPTH. (SIMMONS BRAND) RUN CULINARY WATER INTO THE LIFT STATION BUILDING TO THE DEEP SINK. REFER TO THE LIFT STATION SITE PLAN STANDARD DETAIL S7.

9. SLOPE THE ENTIRE SITE AWAY FROM THE LIFT STATION BUILDING AT A MINIMUM 2% SLOPE TO PREVENT WATER FROM PONDING ON THE SITE.

10. MINIMUM LIFT STATION AREA IS 60' x 60', FENCED PER UDOT DETAIL NO. FG-6 w/ A 16' WIDE DOUBLE SWING GATE. REFER TO THE LIFT STATION SITE PLAN STANDARD DETAIL S7.

11. SEAL ALL OPENINGS THRU CONCRETE PAD INTO STATION ENCLOSURE GAS TIGHT.

12. A GAS TIGHT FLOOR DRAIN IS REQUIRED IN THE BUILDING. SLOPE THE CONCRETE FLOOR TO THE FLOOR DRAIN. DRAIN INTO THE WETWELL.

13. THE FOLLOWING UTILITIES MUST BE RUN TO THE LIFT STATION SITE. THERE ARE NO EXCEPTIONS TO THIS REQUIREMENT. ALL OF THESE UTILITIES MUST BE BROUGHT INTO THE LIFT STATION SITE. ALL METER AND PANEL LOCATIONS MUST BE REVIEWED AND APPROVED BY THE CITY ENGINEER PRIOR TO INSTALLATION:
    NATURAL GAS
    POWER
    TELEPHONE
    CULINARY WATER

14. THE CONTROL PANEL MUST BE ANCHORED TO THE CONCRETE PAD.

GENERAL NOTES CONTINUED:

15. PROVIDE A DUPLEX OUTLET INSIDE THE CONTROL PANEL. SCADA EQUIPMENT MUST BE PLUGGED IN INSIDE THE CONTROL PANEL.

16. THE BUILDING SHALL COME EQUIPPED WITH A 12-VOLT DC EMERGENCY LIGHTING SYSTEM THAT WILL PROVIDE 50 WATTS OF ILLUMINATION FOR 1-1/2 HOURS IN THE EVENT OF AN EMERGENCY.

17. A MASONRY BLOCK STRUCTURE w/ INSULATED AND STEEL FRAMED METAL ROOF IS REQ'D. THE MINIMUM BUILDING DIMENSIONS ARE 14' WIDE x 20' LONG x 10' TALL. THERE MUST BE AT LEAST 3' OF CLEARANCE ALL AROUND. HEIGHT CLEARANCE MUST ALLOW FOR THE LIFTING BEAM TO BE TALL ENOUGH TO LIFT THE PUMP EQUIPMENT UP AND OVER THE OTHER EQUIPMENT.

18. THIS DETAIL DRAWING DOES NOT TAKE THE PLACE OF STAMPED ENGINEERING DRAWINGS FOR THE LIFT STATION. STRUCTURAL DRAWINGS MUST BE PROVIDED FOR THE MASONRY BUILDING THAT ARE STAMPED BE A LICENSED STRUCTURAL ENGINEER. SUBMITTALS, SHOP DRAWINGS, ENGINEERING CALCULATIONS, AND STAMPED CONSTRUCTION DRAWINGS MUST BE SUBMITTED TO THE CITY ENGINEER FOR ALL PROPOSED PUMP EQUIPMENT AND FOR THE BUILDING. THE DIMENSIONS SHOWN ON THIS DRAWING ARE PROVIDED TO SHOW THE MINIMUM CLEARANCES THAT MUST BE MET.

19. 120-VOLT ELECTRICAL OUTLETS MUST BE LOCATED A MINIMUM OF 12" ABOVE THE FLOOR.

20. SUBMITTALS ARE REQUIRED FOR ALL LIGHTS, FANS, HEATER, ELECTRICAL EQUIPMENT, PUMPS, AUTO-DIALERS, ETC. AN OWNER'S MANUAL MUST BE PROVIDED TO THE CITY FOR ALL EQUIPMENT IN THE LIFT STATION PRIOR TO COMPLETION OF THE PROJECT.

21. THE CONTROL PANEL SHALL BE EQUIPPED WITH AN DORSETT SCADA SYSTEM TO PROVIDE CONTACT WITH CITY PERSONNEL ON ALL ALARM POINTS.

22. WETWELL. THE SIZE OF THE WETWELL AND THE DISTANCE FROM THE INVERT OF THE INFLUENT LINE TO THE CONCRETE PAD SHOULD BE PROPERLY DESIGNED TO ALLOW AT LEAST TEN MINUTES LAPSED TIME BETWEEN SUCCESSIVE STARTS OF A PUMP TO PREVENT SHORT CYCLING OF ELECTRIC MOTORS AND CONTROL.

ENOCH CITY
900 EAST MIDVALLEY RD
Enoch, UT 84721
Tel. (435) 586-1119

Copyright © 2019

SELF PRIMING SEWER LIFT STATION
GENERAL NOTES

SCALE: N.T.S.
DATE: FEB. 2019

DETAIL No.: S5.5

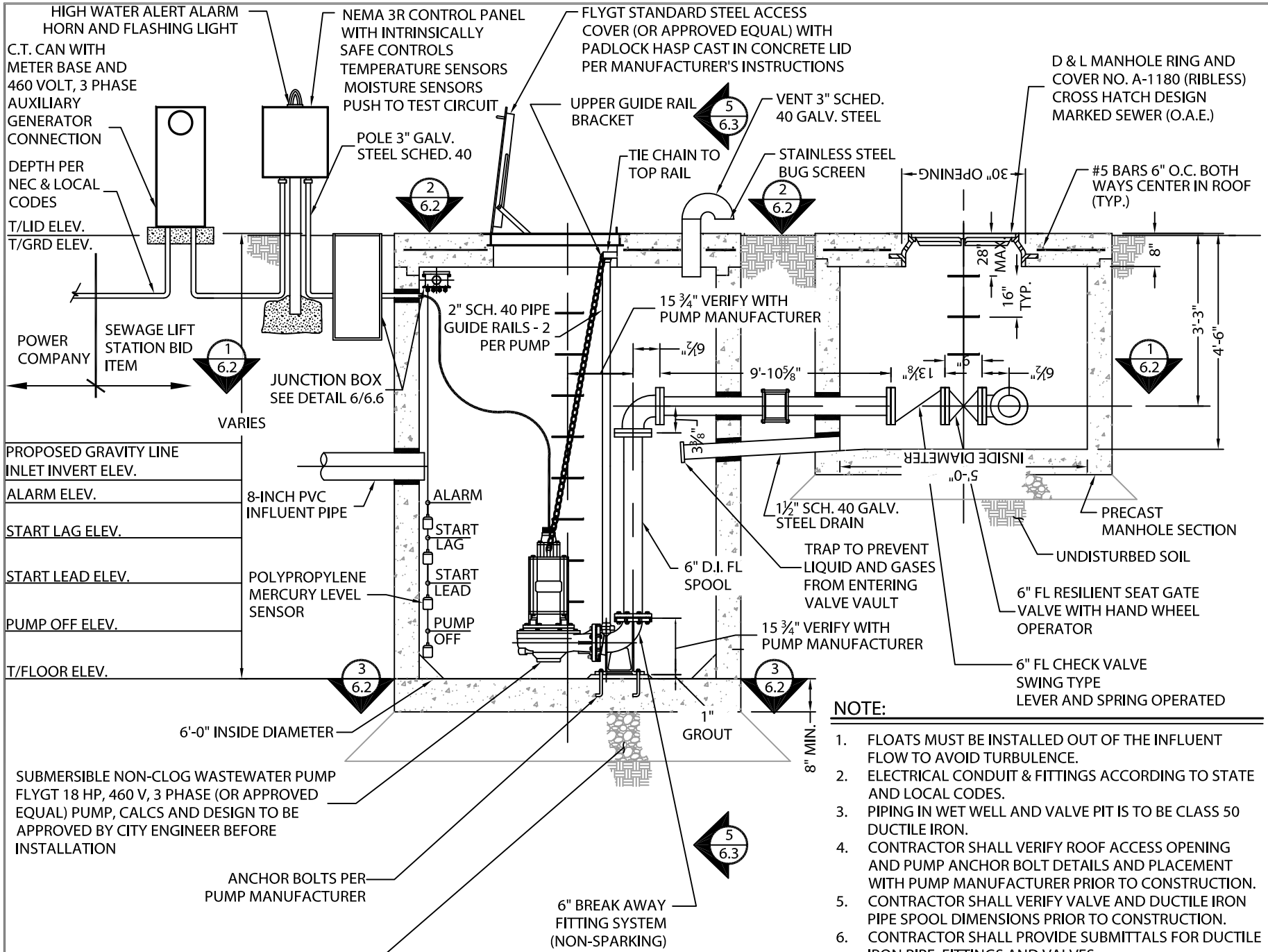

ELEVATION VIEW (SECTION 4)

N.T.S.

NOTE:

1. FLOATS MUST BE INSTALLED OUT OF THE INFLUENT FLOW TO AVOID TURBULENCE.
2. ELECTRICAL CONDUIT & FITTINGS ACCORDING TO STATE AND LOCAL CODES.
3. PIPING IN WET WELL AND VALVE PIT IS TO BE CLASS 50 DUCTILE IRON.
4. CONTRACTOR SHALL VERIFY ROOF ACCESS OPENING AND PUMP ANCHOR BOLT DETAILS AND PLACEMENT WITH PUMP MANUFACTURER PRIOR TO CONSTRUCTION.
5. CONTRACTOR SHALL VERIFY VALVE AND DUCTILE IRON PIPE SPOOL DIMENSIONS PRIOR TO CONSTRUCTION.
6. CONTRACTOR SHALL PROVIDE SUBMITTALS FOR DUCTILE IRON PIPE, FITTINGS AND VALVES.
7. CONTRACTOR TO PROVIDE FOR INSTALLATION OF PHONE LINE TO CONTROL PANEL FOR AUTO DIALER.
8. ALL BACKFILL AROUND LIFT STATION & VALVE VAULT TO BE COMPACTED TO 95% OF MAX. DENSITY
9. ALL DIMENSIONS TO BE VERIFIED BY CONTRACTOR BEFORE INSTALLATION

DETAIL No.: S6.1

SHEET: 1 of 5

SCALE: N.T.S.

DATE: FEB. 2019

SUBMERSIBLE SEWER LIFT STATION

ENOCH CITY
900 EAST MIDVALLEY RD
Enoch, UT 84721
Tel. (435) 586-1119

Copyright © 2019

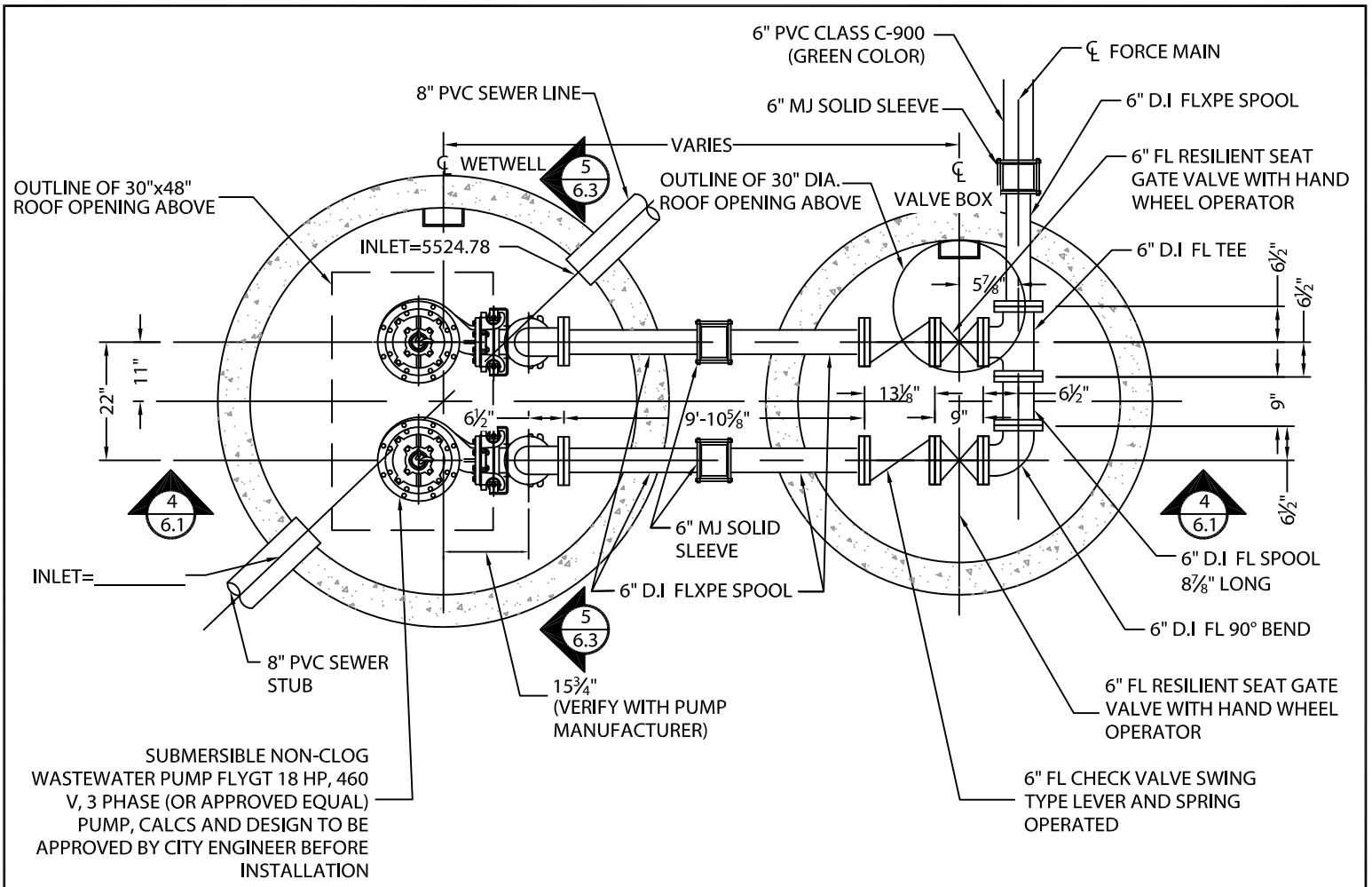

SECTION 1

N.T.S.

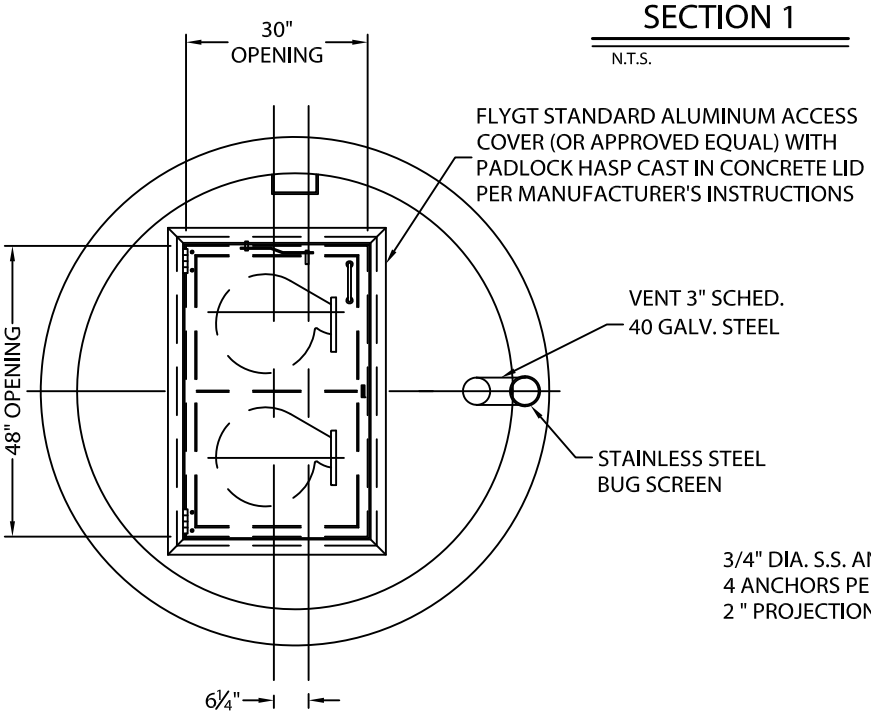

SECTION 2

N.T.S.

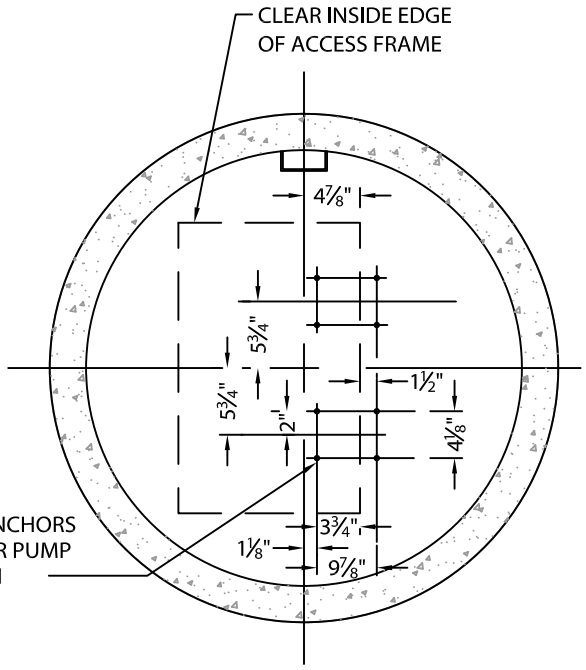

SECTION 3

N.T.S.

ENOCH CITY

ENOCH CITY

900 EAST MIDVALLEY RD
Enoch, UT 84721
Tel. (435) 586-1119

Copyright © 2019

SUBMERSIBLE SEWER LIFT STATION

SCALE:
N.T.S.

DATE:
FEB. 2019

DETAIL No.:

S6.2

SHEET:
2 of 5

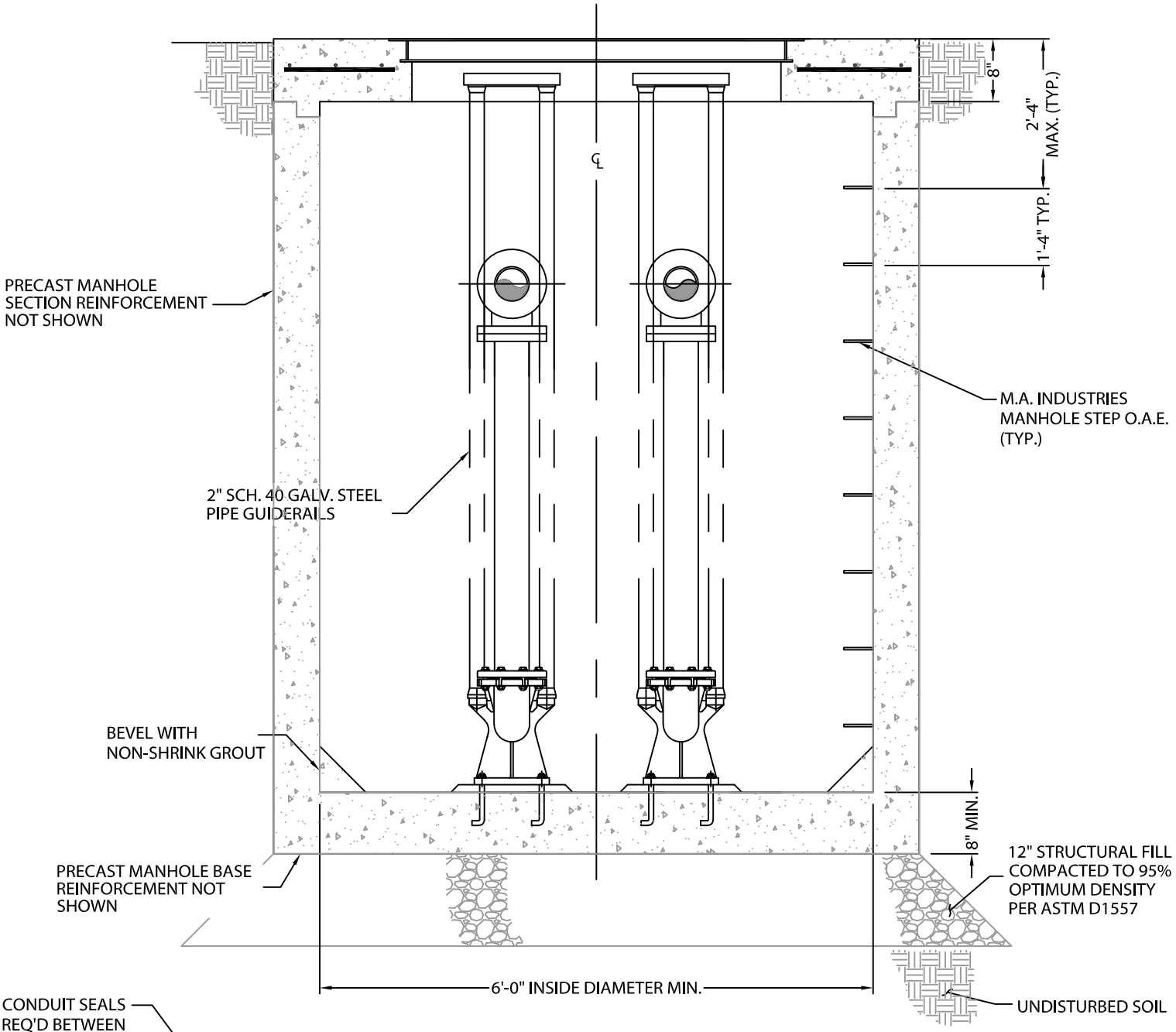

SECTION 5

N.T.S.

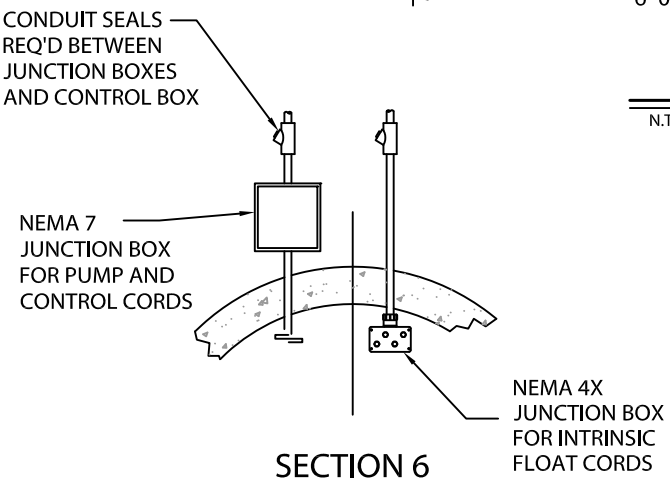

SECTION 6

N.T.S.

ENOCH CITY

900 EAST MIDVALLEY RD
Enoch, UT 84721
Tel. (435) 586-1119

SUBMERSIBLE SEWER LIFT STATION

SCALE:
N.T.S.

DATE:
FEB. 2019

DETAIL No.:

S6.3

SHEET:
3 of 5

ELECTRICAL NOTES:

1. THE CONTRACTOR SHALL FURNISH AND INSTALL A COMPLETELY SELF-CONTAINED DUPLEX MOTOR CONTROL PANEL. THE CONTROL PANEL SHALL PROVIDE SHORT CIRCUIT AND OVERLOAD PROTECTION FOR THE PUMPS. AN ALTERNATOR SHALL BE PROVIDED TO ALTERNATE THE LOAD PUMP DUTY BETWEEN THE TWO PUMPS ON SUCCESSIVE CYCLES.

2. THE DUPLEX MOTOR CONTROLS SHALL BE HOUSED IN A NEMA 3R ENCLOSURE. THE ENCLOSURE SHALL BE FORMED OF G-90 GALVANIZED STEEL WITH ALL SURFACES PHOSPHATIZED, THEN FINISHED INSIDE AND OUT WITH ANSI 61 GRAY POLYESTER POWDER FINISH. A FULL WIDTH DRIP SHIELD IS TO BE FORMED INTO THE TOP CAP TO PREVENT STANDING WATER FROM DRIPPING INTO THE INTERIOR WHEN THE DOOR IS OPENED. THIS DRIP SHIELD AND THE FORMED EDGES OF THE ENCLOSURE SHALL PROVIDE A SEATING SURFACE FOR THE FULL DOOR GASKET. THE DOOR IS TO BE EQUIPPED WITH TWO GALVANIZED HINGES WITH STAINLESS STEEL HINGE PINS. TWO PADLOCKABLE DRAW-PULL LATCHES SHALL BE PROVIDED TO HOLD THE DOOOR CLOSED. WELD NUTS SHALL SUPPORT THE REMOVABLE STEEL COMPONENT MOUNTING PANEL. THE REMOVABLE PANEL IS TO BE WHITE ENAMEL AND WILL BE DRILLED AND TAPPED FOR COMPONENT MOUNTING. THE ENCLOSURE SHALL HAVE EXTERNAL MOUNTING TABS FOR POLE MOUNTING. THE ENCLOSURE MUST BE RATED NEMA 3R RAINTIGHT AND SHALL BE SUITED FOR OUTDOOR MOUNTING.

3. A THERMAL MAGNETIC CIRUIT BREAKER SHALL BE PROVIDED TO PROTECT THE MOTOR FROM SHORT CIRCUITS AND TO SERVE AS A MOTOR BRANCH CIRCUIT DISCONNECT AS REQUIRED BY THE NATIONAL ELECTRICAL CODE (NEC).

4. A MAGNETIC STARTER SHALL BE PROVIDED FOR THE PUMP MOTOR. THE STARTER SHALL BE EQUIPPED WITH A THREE (3) POLE BIMETALLIC OVERLOAD RELAY WITH AMBIENT COMPENSATION AND CLASS 10 QUICK TRIP HEATERS. HEATERS MUST BE PROPERLY SIZED FOR MOTOR LOAD. THE OVERLOAD RELAY SHALL PROVIDE THE TERMINALS FOR CONNECTION OF THE PUMP MOTOR CABLE.

5. A CONTROL TRANSFORMER SHALL BE PROVIDED TO SUPPLY 115 VOLTS FOR THE CONTROL CIRCUIT AND AN AUXILARY OUTLET AT THE CONTROL PANEL. THE TRANSFROMER SHALL BE A CONTINUOUS DUTY, MACHINE TOOL TYPE, SIZED TO MEET THE LOAD REQUIREMENTS OF THE CONTROL CIRCUIT. THE TRANSFORMER PRIMARY SHALL BE CONNECTED TO THE LOAD SIDE OF THE CIRCUIT BREAKER. ONE SIDE OF THE SECONDARY WINDING SHALL BE SIZED TO PROTECT THE TRANSFORMER IN ACCORDANCE WITH REQUIREMENT OF THE NEC.

6. A TWO (2) POLE, 600 VAC, 30 AMPERE RATED FUSE BLOCK SHALL BE PROVIDED FOR TRANSFORMER PRIMARY WINDING: A ONE (1) POLE, 250 VAC, 30 AMPERE FUSE BLOCK WILL BE PROVIDED FOR THE SECONDARY WINDING. FUSES SHALL BE SIZED TO PROTECT THE TRANSFORMER IN ACCORDANCE WITH REQUIREMENTS OF THE NEC.

7. AN AUTOMATIC ALTERNATOR SHALL BE PROVIDED WHICH WILL ALTERNATE THE LEAD AND LAG PUMPS AT THE SHUT-OFF OF EACH PUMPING CYCLE. THE ALTERNATOR CIRCUITRY SHALL START THE LAG PUMP IN THE EVENT THAT THE LEAD PUMP CAPACITY IS LESS THAN THE INFLOW OR THE LEAD PUMP FAILS.

8. A TERMINAL BLOCK SHALL BE PROVIDED FOR CONNECTION OF LEVEL CONTROLS AND OTHER CONTROL WIRING AS REQUIRED FOR PROPER PUMP INSTALLATION. THE CONTROL SHALL BE EQUIPPED WITH A HAND-OFF-AUTO SELECTOR SWITCH AND AN AMBER RUN LIGHT, MOUNTED ON AN ALUMINUM PLATER UNDER COVER OF THE ENCLOSURE DOOR. THE SELECTOR SWITCH SHALL BE A TOGGLE TYPE WITH SCREW TERMINALS RATED 250 VAC, THREE (3) AMPERES. THE RUN LIGHT SHALL BE ⅓ WATT 115-VOLT NEON TYPE.

9. THE CONTROL PANEL SHALL BE EQUIPPED WITH AN DORSETT SCADA SYSTEM TO PROVIDE CONTACT WITH CITY PERSONNEL ON ALL ALARM POINTS.

10. THE CONTROL SHALL BE WIRED IN ACCORDANCE WHITH ALL APPLICABLE REQUIREMENTS OF THE NATIONAL ELECTRICAL CODE. ALL WIRING SHALL BE PERFORMED IN A NEAT AND ORDERLY MANNER.

PUMP NOTES:

EQUIPMENT:

A. THE CONTRACTOR SHALL FURNISH AND INSTALL TWO (2) 6-INCH, FLYGT 18 HORSEPOWER, SUBMERSIBLE NON-CLOG PUMPS, WITH 453 HT IMPELLER. THE MOTOR SHALL BE 460 VOLT, 3 PHASE, 60 HZ.
B. THE PUMPS SHALL BE SUBMERSIBLE, NON-CLOG UNITS DESIGNED FOR HANDLING RAW SEWAGE. THE PUMPS SHALL BE CAPABLE OF OPERATING IN A LIQUID TEMPERATURE OF 104° F.
C. PROVIDE MOISTURE CUT-OFF SENSORS IN THE LIFT STATION PUMP MOTORS.
D. STAND BY GENERATOR SET
E. AS PART OF THE LIFT STATION SYSTEM THE CONTRACTOR SHALL FURNISH AND INSTALL A STAND-BY GENERATOR SET. THE GENERATOR SET SHALL BE A MTU ON-SITE ENERGY GENERATOR SET, MODEL:80 GC6NLT1 (OR AN APPROVED EQUAL). ALL PROVIDED EQUIPMENT, INSTALLATION, START-UP AND TESTING FOR THE GENERATOR SET SHALL COMPLY WITH THE EQUIPMENT MANUFACTURE'S LATEST SPECIFICATIONS AND INSTRUCTIONS FOR THE ENGINE, GENERATOR, TRANSFER SWITCH, ENCLOSURE AND THEIR RELATED COMPONENTS.

SUBMITTALS:

THE FOLLOWING SUBMITTAL DATA SHALL BE PROVIDED BEFORE INSTALLATION BEGINS:

A. PUMP PERFORMANCE CURVES
B. PUMP OUTLINE DRAWING
C. STATION DRAWING FOR ACCESSORIES
D. ELECTRICAL MOTOR DATA
E. CONTROL DRAWING AND DATA
F. ACCESS FRAME AND DRAWING
G. INSTALLATION GUIDES
H. TECHNICAL MANUALS
I. PARTS LIST
J. AUTO DIALER
K. STAND BY GENERATOR SET AND ALL COMPONENTS.

FAILURE TO PROVIDE THIS INFORMATION SHALL BE CAUSE FOR REJECTION.

TESTS:

THE FOLLOWING TEST SHALL BE PERFORMED ON EACH PUMP BEFORE SHIPMENT:

A. IMPELLER, MOTOR RATING AND ELECTRICAL CONNECTIONS SHALL BE CHECKED FOR COMPLIANCE WITH THE DRAWINGS.
B. PRIOR TO SUBMERGENCE, EACH PUMP SHALL BE RUN DRY TO ESTABLISH CORRECT ROTATION.
C. EACH PUMP SHALL BE RUN SUBMERGED IN WATER.
D. MOTOR AND CABLE INSULATION SHALL BE TESTED FOR MOISTURE CONTENT OR DEFECTS.

UPON REQUEST, A WRITTEN QUALITY ASSURANCE RECORD CONFIRMING THE ABOVE TESTING SHALL BE SUPPLIED WITH EACH PUMP AT THE TIME OF SHIPMENT.

START-UP SERVICE:

THE EQUIPMENT MANUFACTURER SHALL FURNISH THE SERVICES OF A QUALIFIED SEVICE REPRESENTATIVE AT THE SITE TO INSPECT THE INSTALLATION. AFTER THE PUMPS HAVE BEEN COMPLETELY INSTALLED AND WIRED, THE CONTRACTOR SHALL HAVE THE MANUFACTURER PERFORM THE FOLLOWING:

A. MEGGER STATOR AND POWER CABLES.
B. CHECK SEAL LUBRICATION
C. CHECK FOR PROPER ROTATION
D. CHECK POWER SUPPLY VOLTAGE
E. MEASURE MOTOR OPERATING LOAD AND NO LOAD CURRENT
F. CHECK LEVEL CONTROL OPERATION AND SEQUENCE
G. CHECK OPERATION OF STAND BY GENERATOR SET AND ALL COMPONENTS TO INSURE PROPER OPERATION FROM BEGINNING TO END OF A SIMULATED POWER OUTAGE.

DURING THIS INSPECTION THE MANUFACTURER'S REPRESENTATIVE SHALL REVIEW RECOMMENDED OPERATION AND MAINTENANCE PROCEDURES WITH THE OWNER'S PERSONNEL.

CONSTRUCTION NOTES:

1. NEW PVC SDR-35 GRAVITY SEWER LINE GOING INTO LIFT STATION. (LINE SIZE PER PLANS)
2. NEW PVC C900 PRESSURE SEWER PUMPBACK LINE GOING FROM LIFT STATION. (LINE SIZE PER PLANS)
3. INSTALL 16' WIDE x 6' HIGH DOUBLE SWING GATE WITH 3 STRANDS OF BARBED WIRE PER UDOT STANDARD DRAWING FG-6.
4. INSTALL 6' TALL CHAIN LINK FENCE WITH 3 STRANDS OF BARBED WIRE ON ARMS PER UDOT STANDARD DRAWING FG-6.
5. INSTALL 3" MINUS DRAIN ROCK 6" THICK IN THE ENTIRE FENCED IN AREA.
6. INSTALL 1" COPPER WATER LINE INTO BUILDING FOR SELF-PRIMING LIFT STATION.
7. INSTALL NEW FROST FREE HYDRANT AND DRAIN ROCK INCLUDING 1" COPPER WATER LINE FROM METER BOX.
8. LIFT STATION ENVELOPE FOR ALL BUILDINGS, CONCRETE, UTILITY METERS, ELECTRICAL EQUIPMENT, WETWELL, ETC.
9. 2% MIN. SLOPE FROM TOP OF SLAB DOWN TO SURROUNDING GRADE.

NOTES:

1. THIS DETAIL DRAWING DOES NOT TAKE THE PLACE OF STAMPED ENGINEERING DRAWINGS FOR THE LIFT STATION SITE PLAN. THE DIMENSIONS SHOWN ON THIS DRAWING ARE PROVIDED ONLY TO SHOW THE MINIMUM CLEARANCES THAT MUST BE MET.
2. THE FOLLOWING UTILITIES MUST BE INSTALLED TO THE LIFT STATION SITE:
   - CULINARY WATER
   - TELEPHONE
   - POWER
   - GAS
3. AUTO-DIALER IS REQUIRED FOR REMOTE MONITORING OF THE LIFT STATION.

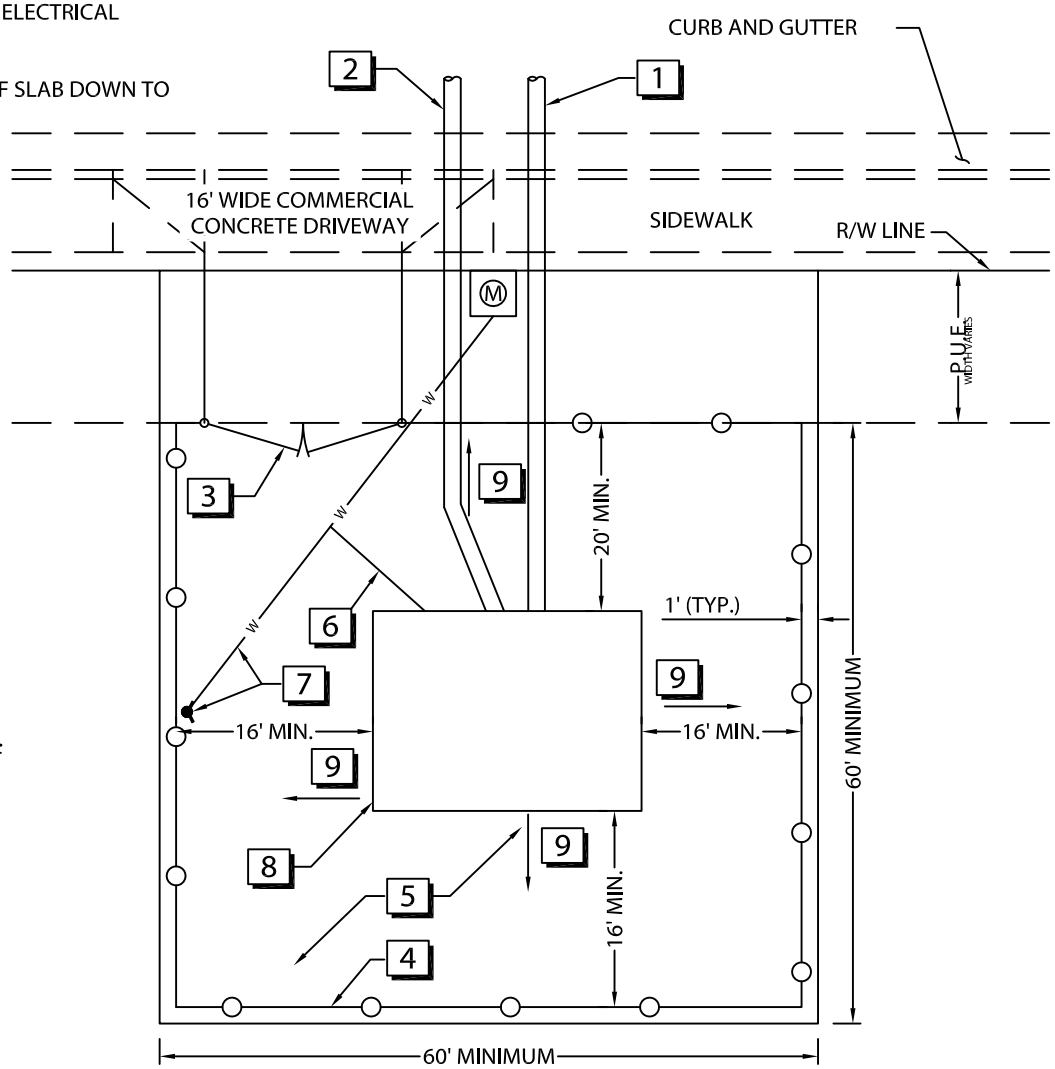

PLAN VIEW

N.T.S.

ENOCH CITY

ENOCH CITY
900 EAST MIDVALLEY RD
Enoch, UT 84721
Tel. (435) 586-1119

Copyright © 2019

SEWER LIFT STATION SITE PLAN

SCALE: N.T.S.

DATE: FEB. 2019

DETAIL No.: S7

SHEET: 1 of 1

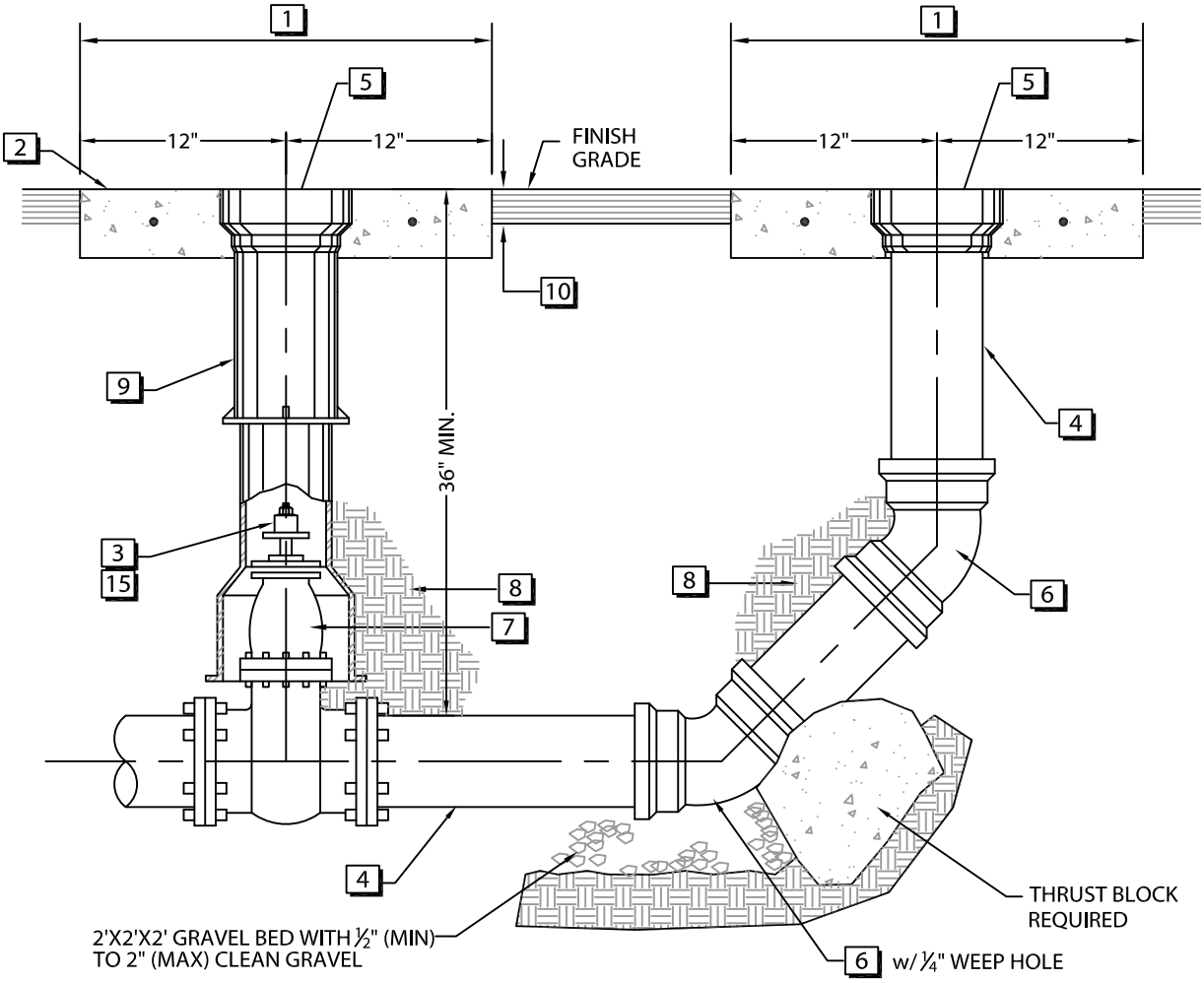

PRESSURE SEWER CLEAN-OUT DETAIL

N.T.S.

NOTES:

1. LOCATOR POSTS TO BE PLACED AT 1000' MAX. SPACING NEXT TO IN-LINE VALVES AND BENDS ON PRESSURE SEWER MAIN.
2. PRESSURE SEWER CLEAN-OUT TO BE PLACED AT 2000' MAX. SPACING NEXT TO END OF PIPES OR IN-LINE VALVES.
3. IN-LINE VALVES TO BE PLACED EVERY 2000' MAX. ON PRESSURE SEWER LINES.
4. IN PAVED AREAS LOCATE WIRE SHALL BE TERMINATED IN THE VALVE CANS OF THE IN-LINE VALVES PER DETAIL.
5. SEE CONSTRUCTION NOTES ON SHEET S8.3.

ENOCH CITY
900 EAST MIDVALLEY RD
Enoch, UT 84721
Tel. (435) 586-1119

Copyright © 2019

PRESSURE SEWER CLEAN-OUT, LATERAL & LOCATOR POST

SCALE: N.T.S.

DATE: FEB. 2019

DETAIL No.: S8.1

SHEET: 1 of 3

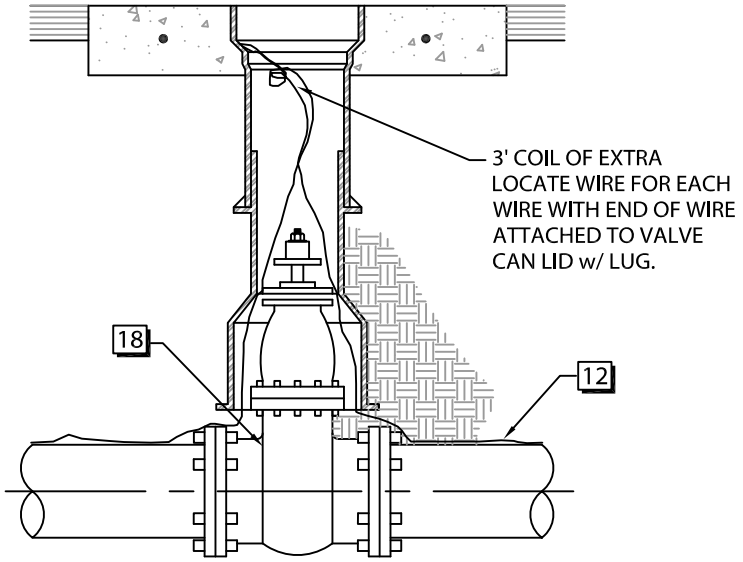

PAVED AREA LOCATE
WIRE TERMINATION

N.T.S.

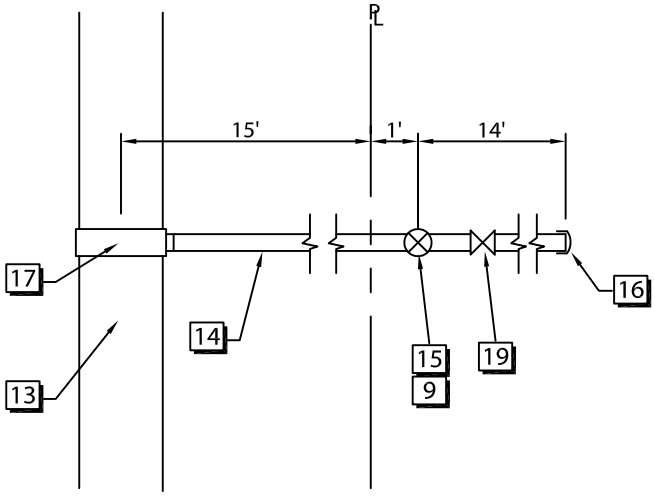

PRESSURE SEWER LATERAL

N.T.S.

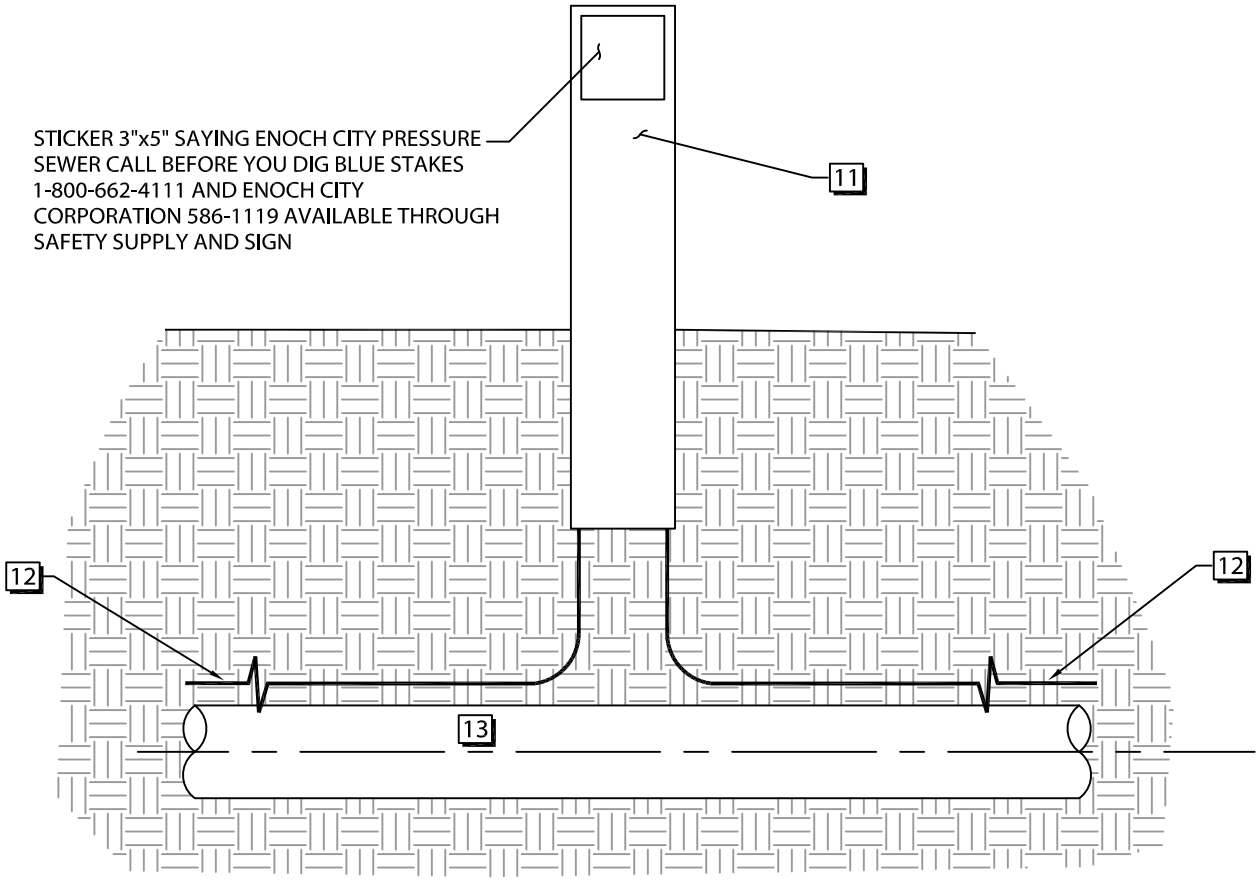

NOTES:

1. SEE CONSTRUCTION NOTES ON SHEET S8.3.

UNPAVED AREA
LOCATOR POST DETAIL

N.T.S.

ENOCH CITY
900 EAST MIDVALLEY RD
Enoch, UT 84721
Tel. (435) 586-1119

Copyright © 2019

PRESSURE SEWER CLEAN-OUT, LATERAL & LOCATOR POST

SCALE:
N.T.S.

DATE:
FEB. 2019

DETAIL No.:
S8.2

SHEET:
2 of 3

1. 24" SQUARE CONCRETE COLLAR 8" THICK.
2. TOP OF VALVE BOX AND CONCRETE COLLAR TO BE ¼" BELOW FINAL STREET GRADE. REINFORCEMENT #4 BAR 16" SQUARE w/ FIBERS (TYP.)
3. IF TOP OF VALVE NUT IS MORE THAN 4' DEEP THEN VALVE STEM EXTENSION IS REQUIRED PER DETAIL.
4. CLEAN OUT PIPE SIZE & MATERIAL SHALL BE THE SAME AS THE PRESSURE SEWER MAIN.
5. PIPE METAL CAP w/ LETTERS "SEWER"
6. 45° BEND REQ'D w/ RESTRAINT JOINTS (MEGALUG O.A.E.)
7. GATE VALVE (TYP.) w/ RESTRAINT JOINTS (MEGALUG O.A.E.)
8. TRENCH BACKFILL
9. CAST IRON SCREW TYPE VALVE BOX
10. PAVEMENT STRUCTURE AS SPECIFIED BY THE DESIGN AGENCY
11. TRACE-O-FLEX MARKER w/ TERMINAL POINTS BY CARSONITE - (ORANGE COLOR)
12. 12 GA. INSULATED COPPER LOCATE WIRE DUCT TAPED TO TOP OF PIPE AT 10' INTERVALS
13. PRESSURE SEWER MAIN.
14. SCH. 40 PVC PIPE (SIZE VARIES)
15. GATE VALVE w/ 2" VALVE WRENCH NUT
16. PVC CAP
17. TAPPING SADDLE PER SPECS.
18. INLINE ISOLATION VALVE (SEE NOTES)
19. CHECK VALVE BY CUSTOMER AT TIME OF CONNECTION.

ENOCH CITY
900 EAST MIDVALLEY RD
Enoch, UT 84721
Tel. (435) 586-1119

Copyright © 2019

PRESSURE SEWER CLEAN-OUT, LATERAL & LOCATOR POST

CONSTRUCTION NOTES

SCALE: N.T.S.

DATE: FEB. 2019

DETAIL No.: S8.3

CONSTRUCTION NOTES:

1. PETERSON SERIES 142 HAND TIGHTENING TEST PLUG TO BE REMOVED WHEN PUMP STATION IS ELIMINATED.
2. FLOW CHANNEL
3. 4' DIA. SEWER MANHOLE
4. BURLAP SAND BAGS - TO BE REMOVED WHEN PUMP STATION IS ELIMINATED
5. FLOW CHANNEL TO PUMP STATION TO BE FILLED WITH GROUT WHEN PUMP STATION IS ELIMINATED.

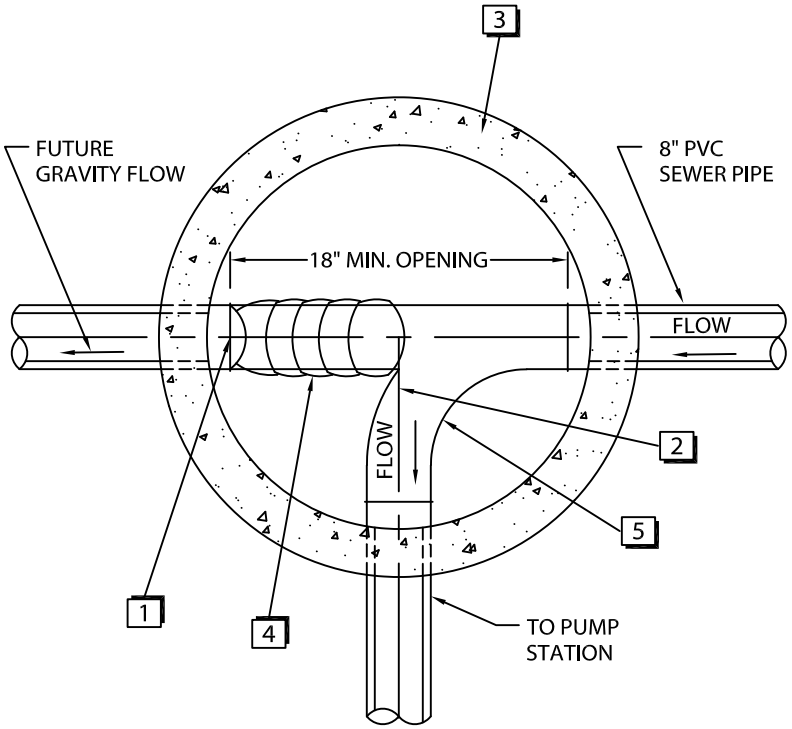

SEWER LIFT STATION DETAIL

N.T.S.

ENOCH CITY

900 EAST MIDVALLEY RD
Enoch, UT 84721
Tel. (435) 586-1119

Copyright © 2019

SEWER LIFT STATION MANHOLE

SCALE:
N.T.S.

DATE:
FEB. 2019

DETAIL No.:
S9

SHEET:
1 of 1

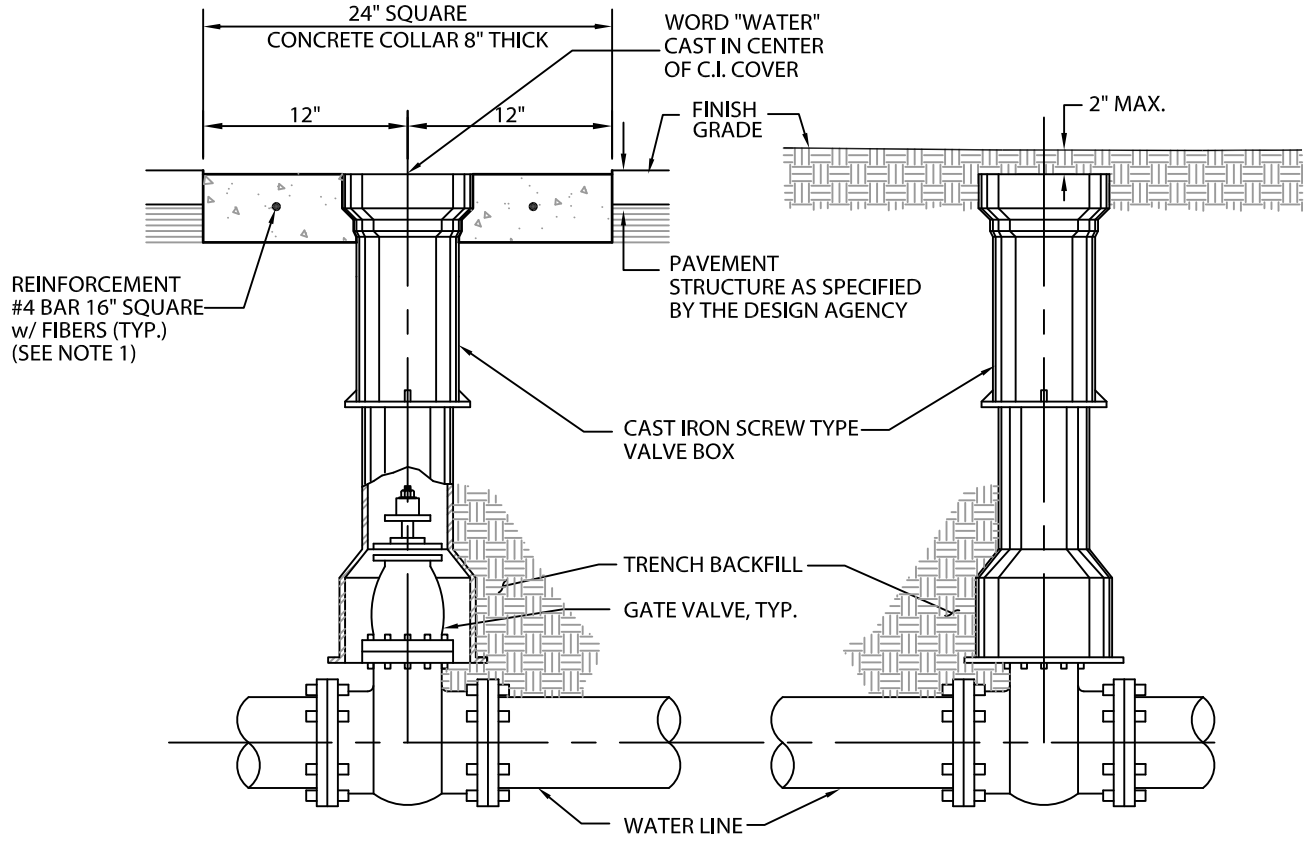

PAVED AREAS

UNPAVED AREAS

WATER VALVE BOX DETAIL

N.T.S.

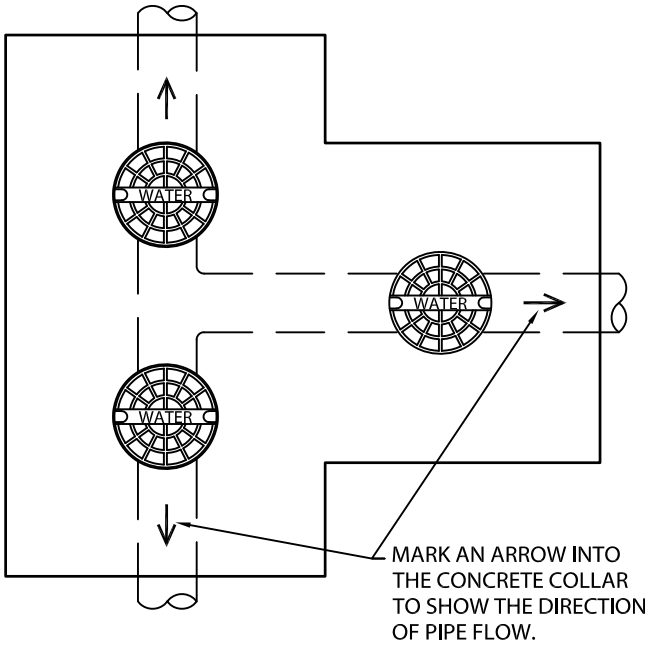

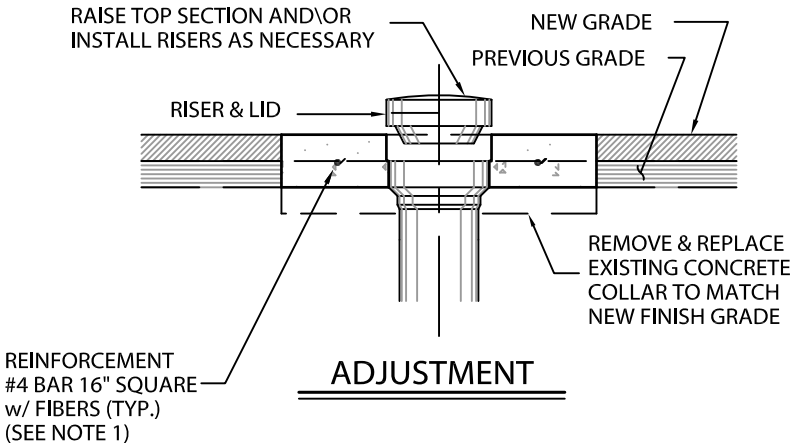

ADJUSTMENT

VALVE COLLAR DETAIL

N.T.S.

ENOCH CITY

ENOCH CITY
900 EAST MIDVALLEY RD
Enoch, UT 84721
Tel. (435) 586-1119

Copyright © 2019

WATER VALVE BOX & COLLAR

SCALE:
N.T.S.

DATE:
FEB. 2019

DETAIL No.:
W1.1

SHEET:
1 of 2

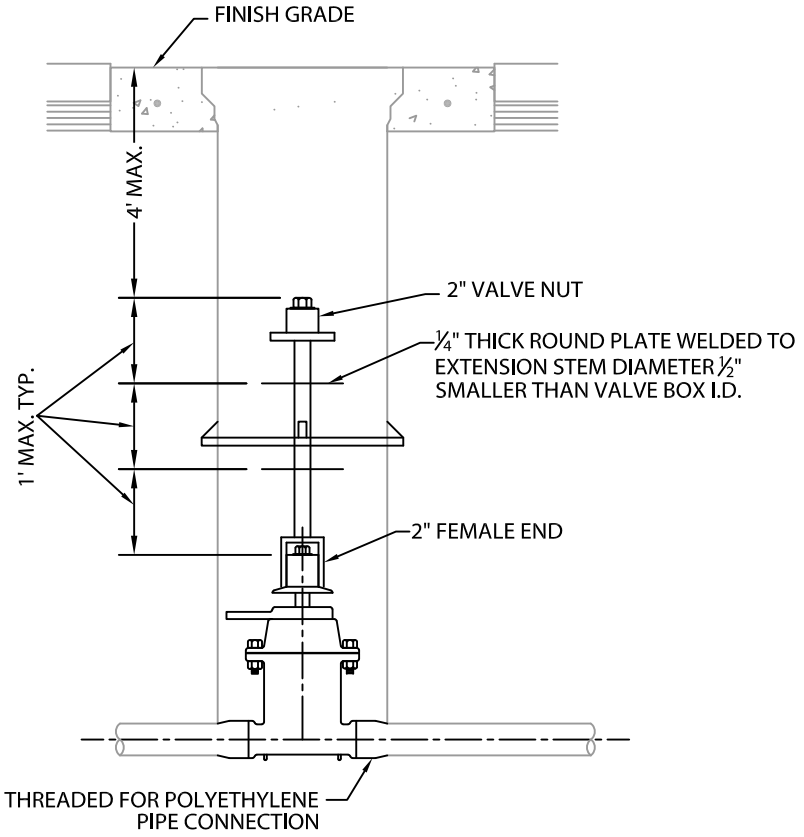

VALVE EXTENSION DETIAL

N.T.S.

NOTES:

1. TOP OF VALVE BOX AND CONCRETE COLLAR TO BE 1/4" BELOW FINAL STREET GRADE.
2. IF TOP OF VALVE NUT IS MORE THAN 4' DEEP THEN VALVE STEM EXTENSION IS REQUIRED PER DETAIL.

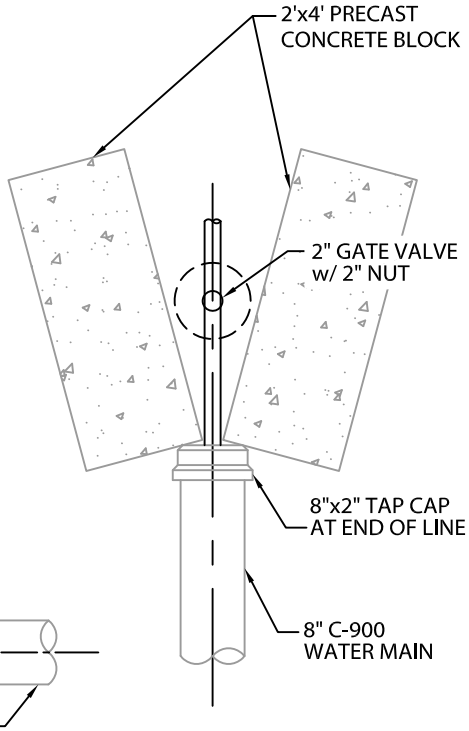

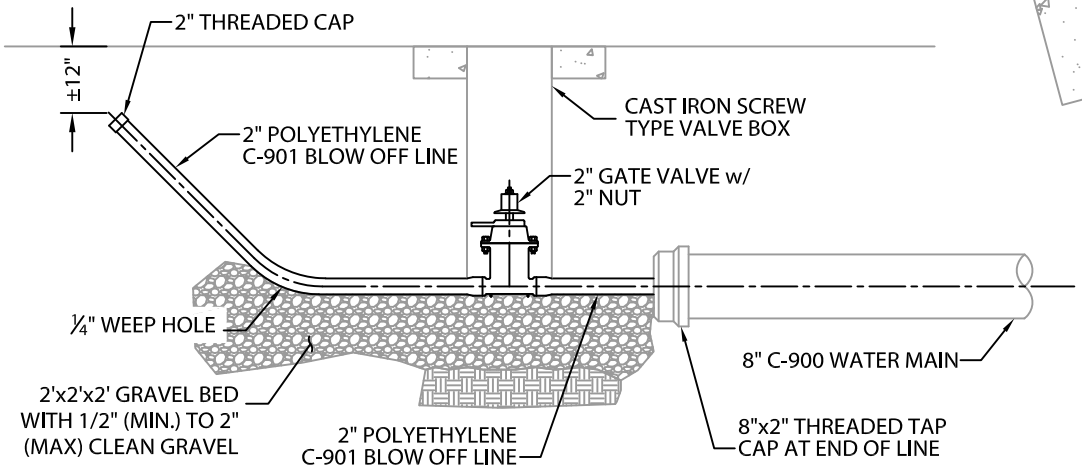

TEMPORARY WATER LINE BLOW-OFF DETAIL

N.T.S.

ENOCH CITY
900 EAST MIDVALLEY RD
Enoch, UT 84721
Tel. (435) 586-1119

Copyright © 2019

WATER VALVE EXTENSION & BLOW-OFF

SCALE: N.T.S.

DATE: FEB. 2019

DETAIL No.: W1.2

SHEET: 2 of 2

NOTES:

1. TOP OF VALVE BOX AND CONCRETE COLLAR TO BE 1/4" BELOW FINAL STREET GRADE.
2. DO NOT BLOW OFF WATER LINES THRU FIRE HYDRANTS.
3. FIRE HYDRANTS TO HAVE A MINIMUM 3 FOOT BURY w/ EXTENSIONS AS REQ'D

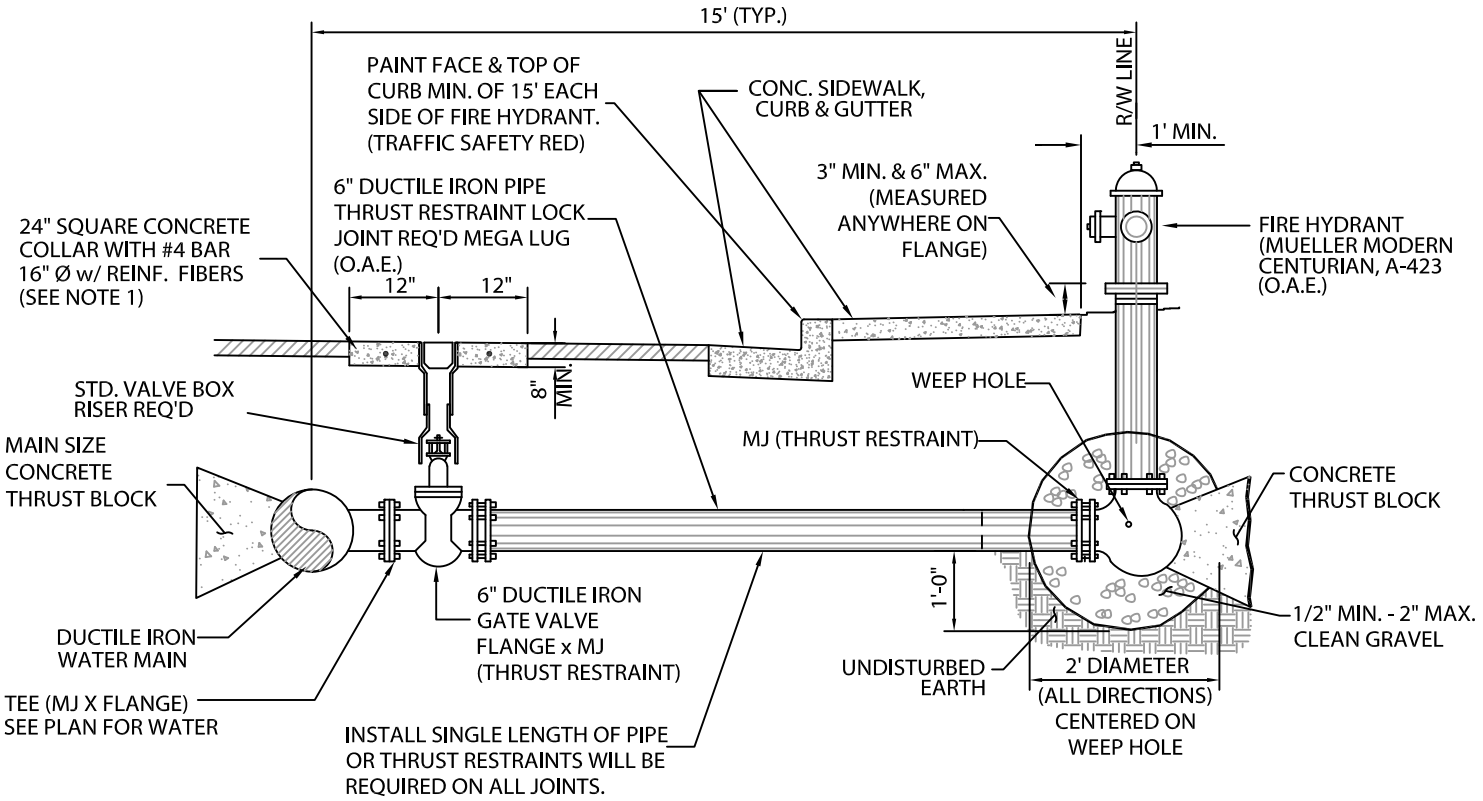

ENOCH CITY

ENOCH CITY
900 EAST MIDVALLEY RD
Enoch, UT 84721
Tel. (435) 586-1119

Copyright © 2019

FIRE HYDRANT

SCALE: N.T.S.

DATE: FEB. 2019

DETAIL No.: W2

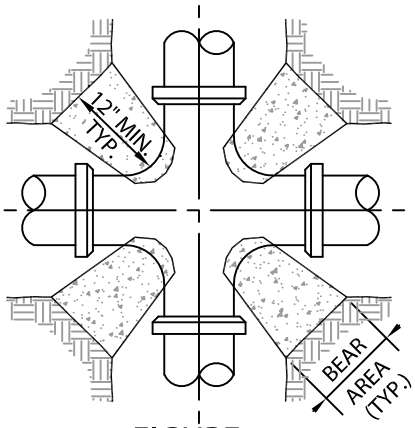

FIGURE 1

CROSS

(ONLY REQ'D IF ANY LEG IS LESS THAN 60 FT. LONG)

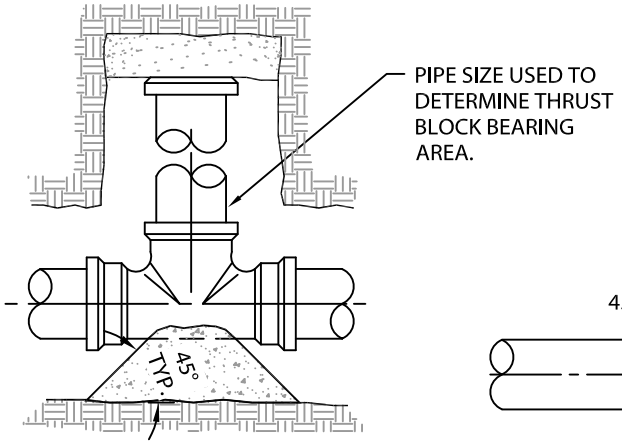

FIGURE 2

TEE, PLUG OR CAP

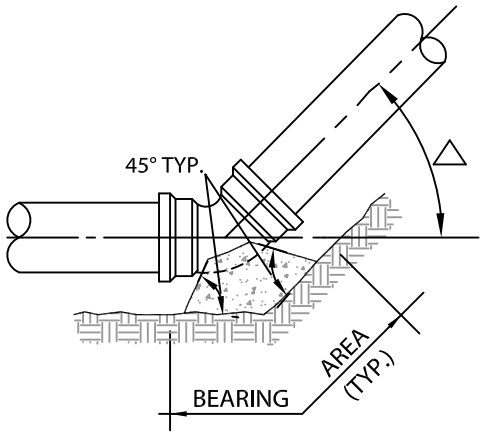

FIGURE 3

HORIZONTAL or UPWARD VERTICAL BEND

GENERAL NOTES:

1. ALL FITTINGS & EXPOSED REBAR TO BE WRAPPED w/ TWO LAYERS OF 6 MIL. POLYETHYLENE WHERE COVERED WITH CONCRETE.
2. ALL CONCRETE SHALL BE CLASS C 3000 P.S.I. MINIMUM 28 DAYS COMPRESSIVE STRENGTH.
3. PLACE CONCRETE AGAINST UNDISTURBED EARTH.
4. TABLE DENOTES MINIMUM BEARING AREA OR VOLUME OF THRUST BLOCK. SPECIAL DESIGN FOR EACH INSTALLATION IS REQUIRED IF ALLOWABLE SOIL BEARING CAPACITY IS LESS THAN 3000 P.S.F.
5. VERTICAL SURFACES NOT BEARING AGAINST UNDISTURBED EARTH SHALL BE FORMED.
6. KEEP CONCRETE AWAY FROM FLANGE BOLTS AND FITTINGS.
7. 90° ELBOWS IN WATER MAINS ARE ONLY ALLOWED AS APPROVED BY THE WATER SUPERINTENDENT.
8. THRUST BLOCK BEARING AREA BASED ON LARGEST PIPE I.D. THAT THRUST BLOCK IS SUPPORTING.

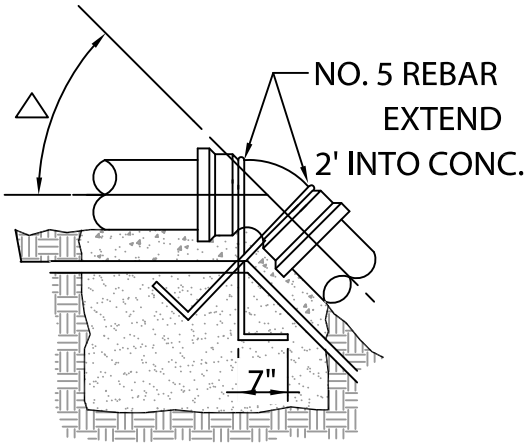

FIGURE 4

DOWNWARD VERTICAL BEND

PIPE I.D.	BEARING AREA, SQUARE FEET						VOLUME OF CONC. CU.YD.		
	FIGURE 1	FIGURE 2	FIGURE 3, △				FIGURE 4, △		
			90°	45°	22-1/2°	11-1/4°	45°	22-1/2°	11-1/4°
4"	2	2	2	1	1	1	1.0	.5	.5
6"	2	3	3	2	1	1	1.5	1.0	.5
8"	2	5	6	3	2	1	2.0	1.0	.5
10"	3	7	10	5	3	1	4.0	2.0	1.0
12"	3	10	14	8	4	2			
14"	4	14	20	10	5	3			
16"	4	20	24	12	7	4			
18"	5	24	30	16	10	5			
20"	5	28	40	20	12	6			

NOTE:

MECHANICAL JOINTS AT ALL FITTINGS IE:
BENDS, TEES, CROSSES, AND VALVES SHALL HAVE THRUST BLOCKS AND THRUST RESTRAINT. (MEGA-LUG OR APPROVED EQUAL).

ENOCH CITY
900 EAST MIDVALLEY RD
Enoch, UT 84721
Tel. (435) 586-1119

Copyright © 2019

THRUST BLOCKS

SCALE:
N.T.S.

DATE:
FEB. 2019

DETAIL No.:
W3

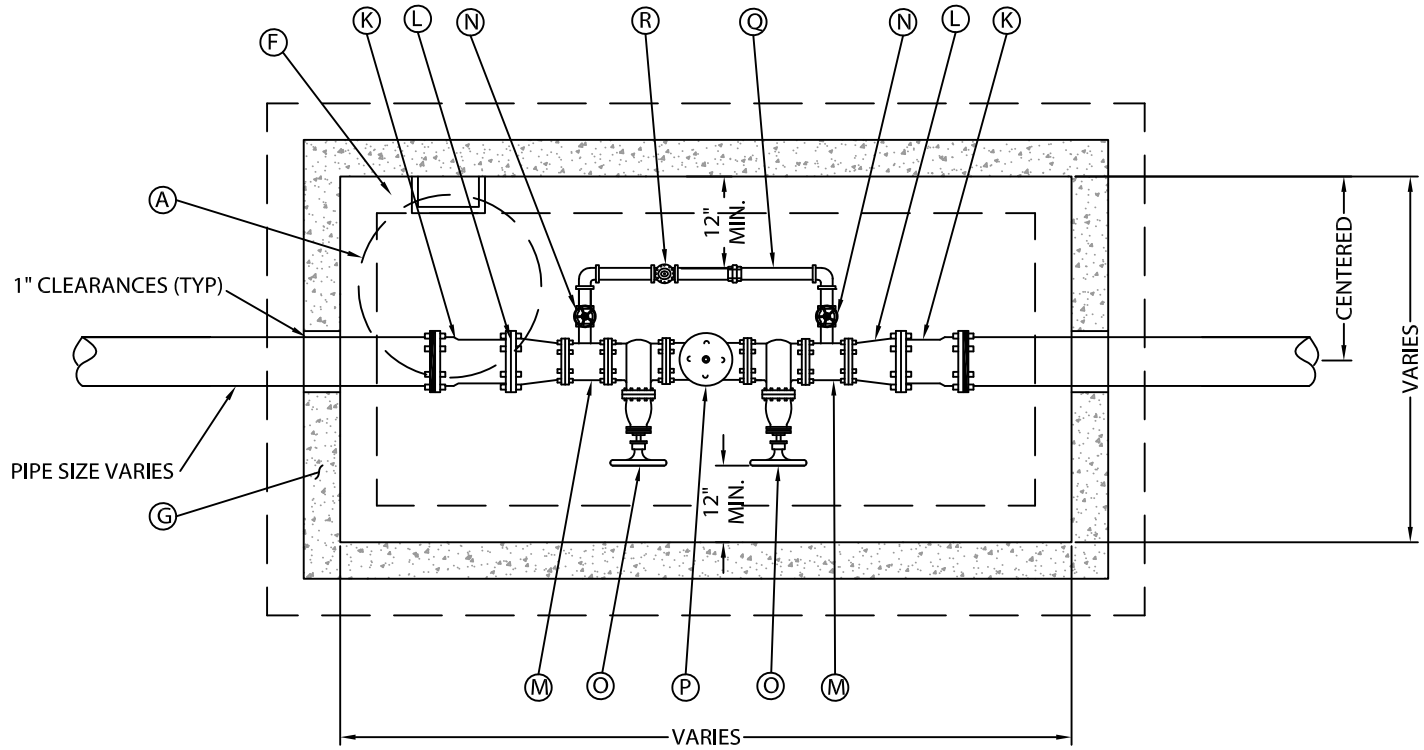

PLAN

N.T.S.

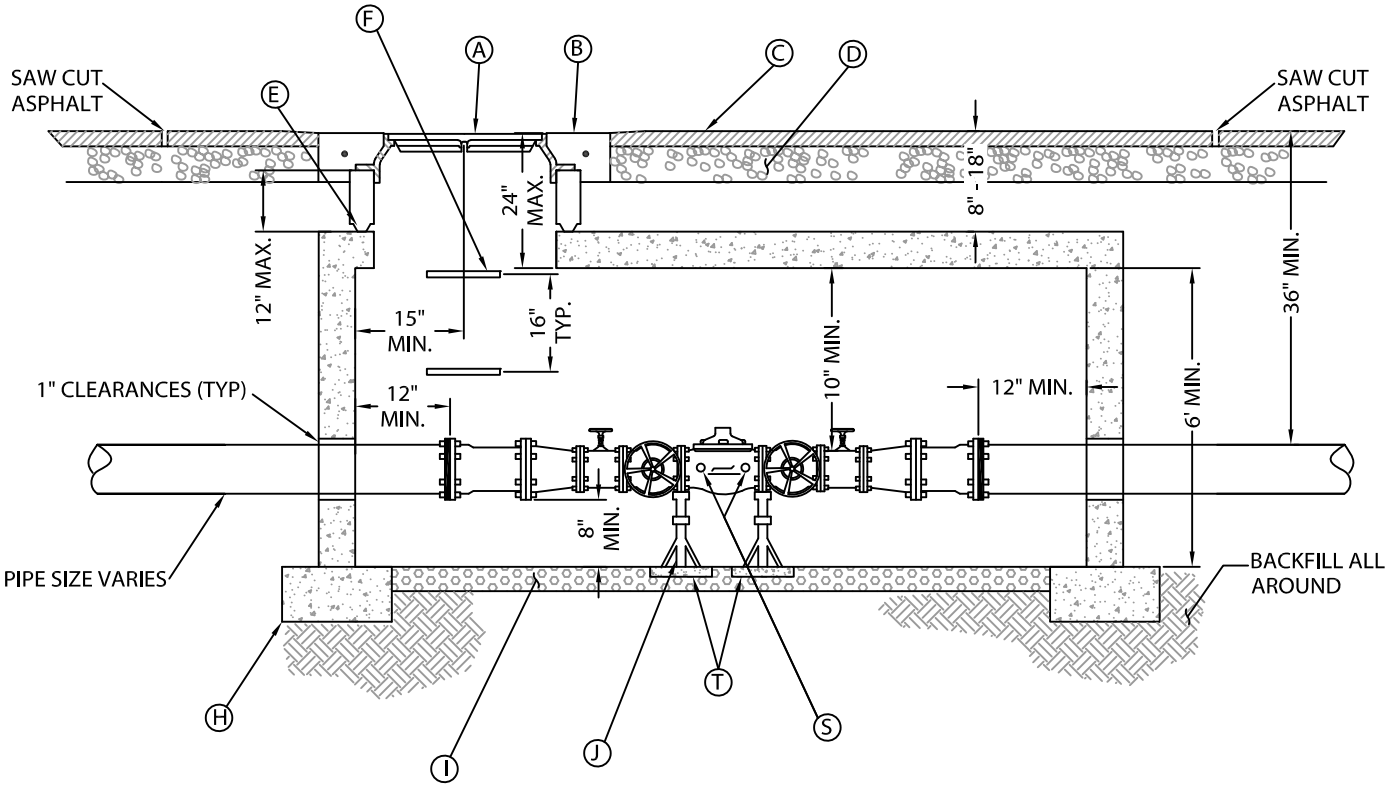

ELEVATION

N.T.S.

ENOCH CITY

ENOCH CITY
900 EAST MIDVALLEY RD
Enoch, UT 84721
Tel. (435) 586-1119

Copyright © 2019

6" PRESSURE REDUCING VALVE w/ 2" BYPASS

SCALE: N.T.S.

DATE: FEB. 2019

DETAIL No.: W4.1

SHEET: 1 of 2

LEGEND			
NO.	*	ITEM	DESCRIPTION
A		MANHOLE RING AND COVER (RIBLESS)	D&L A-1180 O.A.E.
B		4'-0" SQUARE x8" THICK CONCRETE COLLAR	w/ 40" SQUARE #4 BARS & FIBERS
C		3" ASPHALT MAT	
D		8" COMPACTED UNTREATED BASE	
E		GRADE RING(S)	MUST BE SEALED
F		MANHOLE STEP	(M.A. INDUSTRIES INC. O.A.E.), (5) EACH
G		CONCRETE VAULT TOP	AMCOR UV6127T O.A.E.
H		9" x 18" FOOTING w/ (3)-#4 BARS	
I		4" THICK DRAIN GRAVEL	
J		(2) LEVELING JACKS (LENGTH VARIES)	SLIDEWINDER PART #23535 BY BARKER MANUF. CO.
K		X" M.J. x FLANGE ADAPTOR	CEMENT LINED
L		X" x 6" FLANGED REDUCER (IF REQ'D)	CEMENT LINED
M		6" FLANGED STEEL SPOOL WITH 2" OUTLET	EPOXY COATED AND LINED
N		2" GATE VALVE WITH HANDWHEEL	
O		6" GATE VALVE WITH HANDWHEEL	NON-RISING STEM
P		6" PRESSURE REDUCING VALVE	WATTS ACV 115/6115 O.A.E.
Q		2" K-COPPER PIPE AND FITTINGS AS SHOWN	
R		2" PRESSURE REDUCING VALVE	WATTS ACV 115/6115 O.A.E.
S		¾" TAPS w/ PRESSURE GUAGE	2½", 0-300 PSI, GLYCERIN FILLED
T		12" x 12" x 2" CONCRETE BLOCK	

NOTES:

1. UNLESS OTHERWISE SHOWN ALL MATERIALS PER ENOCH CITY ENGINEERING STANDARDS.
2. CONCRETE VAULT LENGTH AND WIDTH SHALL BE SUFFICIENT TO CONTAIN ALL FITTINGS AND MAINTAIN INDICATED CLEARANCE FROM WALLS.
3. VAULTS ARE DESIGNED TO MEET ASTM C858 WITH AASHTO HS-20 LOADING.

ENOCH CITY
900 EAST MIDVALLEY RD
Enoch, UT 84721
Tel. (435) 586-1119

Copyright © 2019

6" PRESSURE REDUCING VALVE w/ 2" BYPASS

SCALE: N.T.S.

DATE: FEB. 2019

DETAIL No.: W4.2

SHEET: 2 of 2

METER SIZE	BOX DIAMETER	BOX COLOR	D&L RING, OAE	BINGHAM & TAYLOR LID, OAE	FORD SETTER, OAE	CURB STOP	SERVICE BOX
1"	18"	WHITE	L-2241	NCUL12.25SLWATHX or NCUL12.25PWATHA	VBHC 74-18W-44-44-G or Q	FORD MODEL B11-444 (O.A.E.) 1" BALL VALVE 1" FM I.P.T. x 1" FM I.P.T.	FORD-EA2 40-40-30R (O.A.E.)

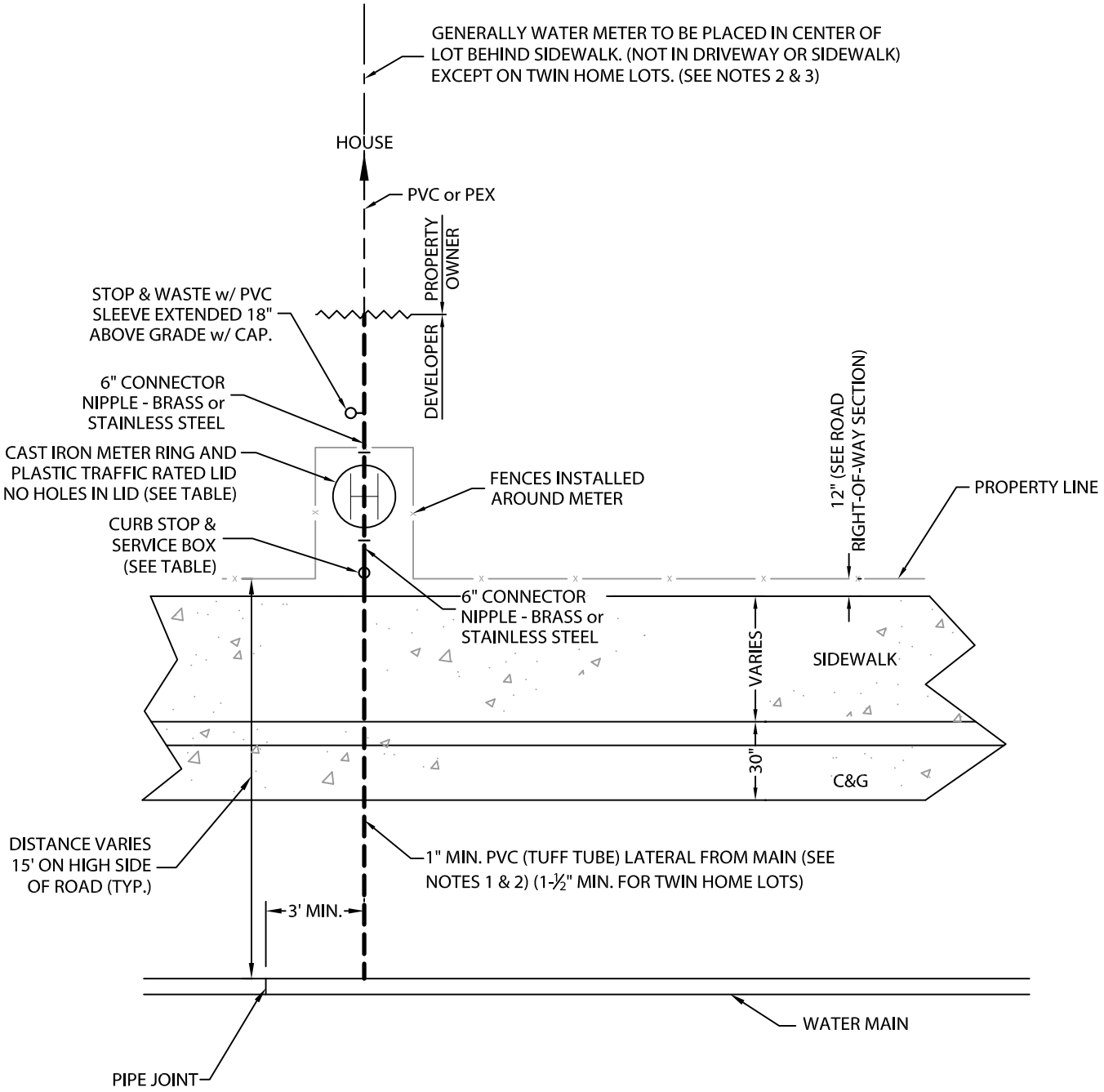

PLAN

N.T.S.

ENOCH CITY

900 EAST MIDVALLEY RD
Enoch, UT 84721
Tel. (435) 586-1119

Copyright © 2019

1" WATER METER

SCALE: N.T.S.

DATE: NOV. 2019

DETAIL No.: W5.1

SHEET: 1 of 2

METER SIZE	BOX DIAMETER	BOX COLOR	D&L RING, OAE	BINGHAM & TAYLOR LID, OAE	FORD SETTER, OAE	CURB STOP	SERVICE BOX
1"	18"	WHITE	L-2241	NCUL12.25SLWATHX or NCUL12.25PWATHA	VBHC 74-18W-44-44-G or Q	FORD MODEL B11-444 (O.A.E.) 1" BALL VALVE 1" FM I.P.T. x 1" FM I.P.T.	FORD-EA2 40-40-30R (O.A.E.)

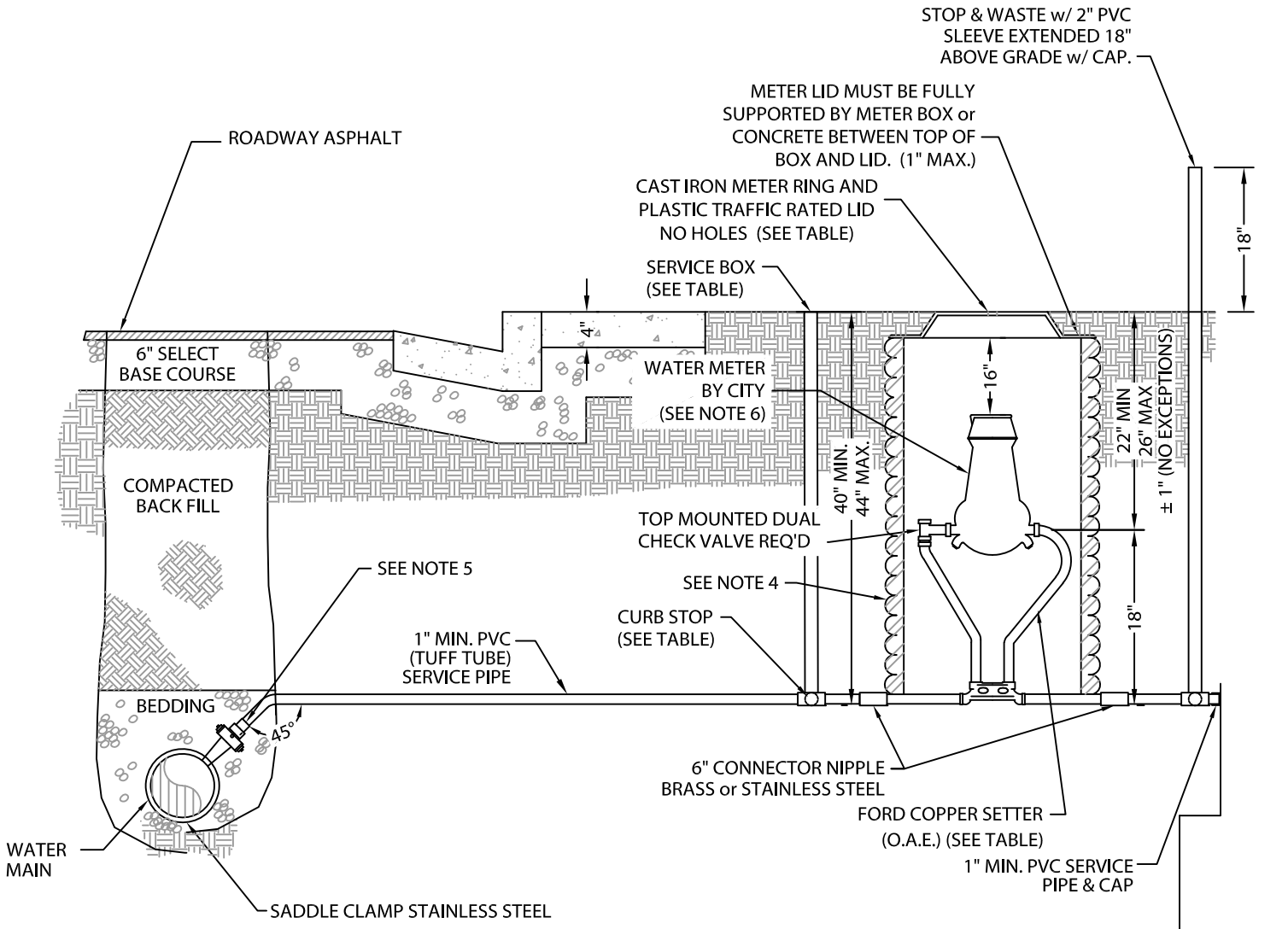

SECTION

N.T.S.

NOTES:

1. ¾" LATERAL ALLOWED ONLY BY APPROVAL OF THE CITY.
2. ON TWIN HOME LOTS THE WATER METERS SHALL BE PLACED 10' FROM EACH SIDE OF LOT LINE.
3. ON INDUSTRIAL ZONED ROADS WHERE SIDEWALKS ARE NOT REQUIRED OR INSTALLED THE WATER METERS SHALL BE INSTALLED BEHIND THE CURB & GUTTER.
4. METER BOX HDP A.D.S. N-12 (O.A.E.) CORRUGATED POLYETHYLENE PIPE CORRUGATED EXTERIOR/ SMOOTH INTERIOR (SEE TABLE). BOX TO BE A CONTINUOUS PIECE OF PIPE WITH NO EXTENSIONS.
5. CORPORATION STOP w/ GRIPP JOINT COMP. COUPLING FOR 1" LATERALS ONLY. GATE VALVES WITH VALVE BOXES SHALL BE USED FOR ANY WATER SERVICE CONNECTION LARGER THAN 1".

ENOCH CITY

ENOCH CITY
900 EAST MIDVALLEY RD
Enoch, UT 84721
Tel. (435) 586-1119

Copyright © 2019

1" WATER METER

SCALE: N.T.S.

DATE: NOV. 2019

DETAIL No.: W5.2

SHEET: 2 of 2

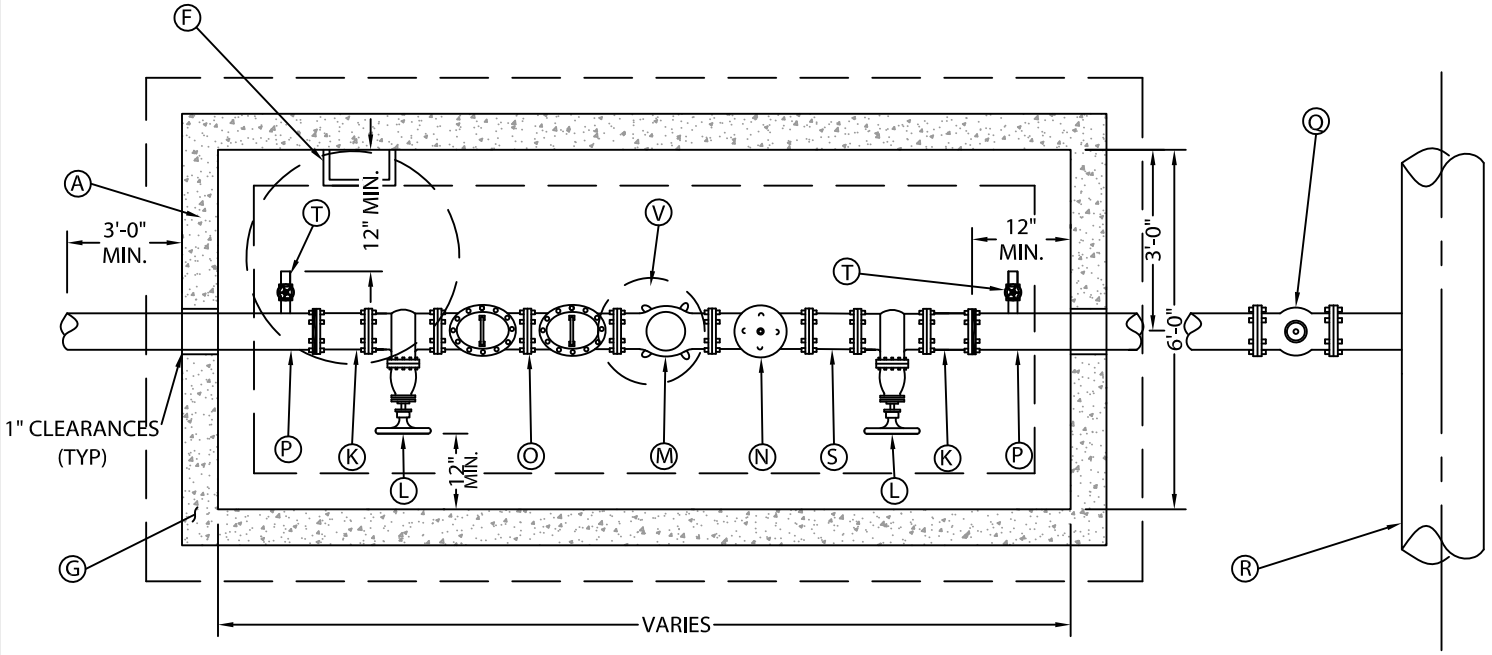

PLAN

N.T.S.

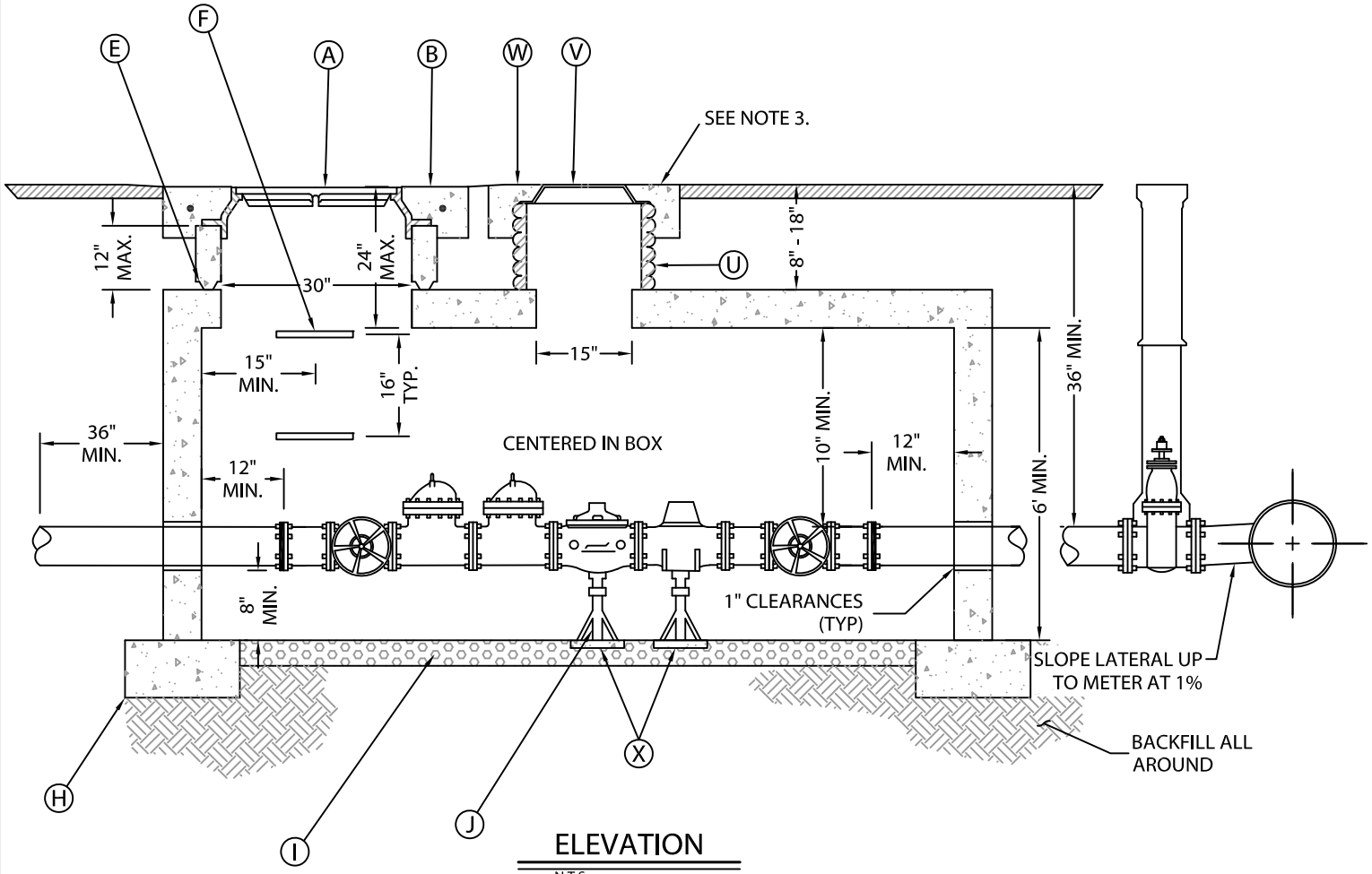

ELEVATION

N.T.S.

ENOCH CITY

900 EAST MIDVALLEY RD
Enoch, UT 84721
Tel. (435) 586-1119

3"-4" WATER METER (COMBINED CULINARY & FIRE SPRINKLER FLOWS)

SCALE:
N.T.S.

DATE:
FEB. 2019

DETAIL No.:
W6.1

SHEET:
1 of 2

Copyright © 2019

LEGEND			
NO.	*	ITEM	DESCRIPTION
A		MANHOLE RING AND COVER (RIBLESS)	D&L A-1180 O.A.E.
B		4'-0" SQUARE x 8" THICK CONCRETE COLLAR	w/ 40" SQUARE #4 BARS & FIBERS
C		NOT USED	
D		NOT USED	
E		GRADE RING(S)	MUST BE SEALED
F		MANHOLE STEP	(M.A. INDUSTRIES INC. O.A.E.), (5) EACH
G		CONCRETE VAULT TOP	AMCOR UV6127T O.A.E.
H		9"x18" FOOTING W/ 3-#4 BARS	
I		4" THICK DRAIN GRAVEL	
J		(2) LEVELING JACKS (LENGTH VARIES)	SLIDEWINDER PART #23535 BY BARKER MANUF. CO.
K		6" MIN. FLANGE ADAPTOR	CEMENT LINED
L		GATE VALVE WITH HANDWHEEL	NON-RISING STEM
M		COMPOUND FLOW METER (PURCHASED FROM CITY)	METRON SPECTRUM
N		PRESSURE REDUCING VALVE (IF REQ'D)	
O		BACKFLOW PREVENTER (IF REQ'D)	
P		DUCTILE IRON PIPE (TO OUTSIDE OF VAULT)	CEMENT LINED
Q		GATE VALVE WITH BOX	SEE W1.1
R		FIRE LOOP OR CITY WATER MAIN	
S		FLANGED SPOOL 12" LONG	
T		1½" PIPE TAP WITH GATE VALVE AND 4" NIPPLE	
U		18" DIA. HDPE PIPE	PER PIPE SPEC
V		RING & LID w/ 2" PUNCHOUT	D&L-2241 O.A.E.
W		30"x30"x8" THICK CONCRETE COLLAR	
X		12"x12"x2" CONCRETE BLOCK	

NOTES:

1. UNLESS OTHERWISE SHOWN ALL MATERIALS PER ENOCH CITY ENGINEERING STANDARDS.
2. CONCRETE VAULT LENGTH & WIDTH SHALL BE SUFFICIENT TO CONTAIN ALL FITTINGS AND MAINTAIN INDICATED CLEARANCE FROM WALLS.
3. WATER METER LIDS & COVERS SHALL ONLY BE INSTALLED IN LANDSCAPED AREAS UNLESS APPROVED BY WATER SUPERINTENDENT.
4. NOT ALLOWED ON PRIVATE SYSTEMS WITH FIRE HYDRANTS.
5. VAULTS ARE DESIGNED TO MEET ASTM C858 WITH AASHTO HS-20 LOADING.

ENOCH CITY
900 EAST MIDVALLEY RD
Enoch, UT 84721
Tel. (435) 586-1119

Copyright © 2019

3"-4" WATER METER (COMBINED CULINARY & FIRE SPRINKLER FLOWS)

SCALE: N.T.S.

DATE: FEB. 2019

DETAIL No.: W6.2

SHEET: 2 of 2

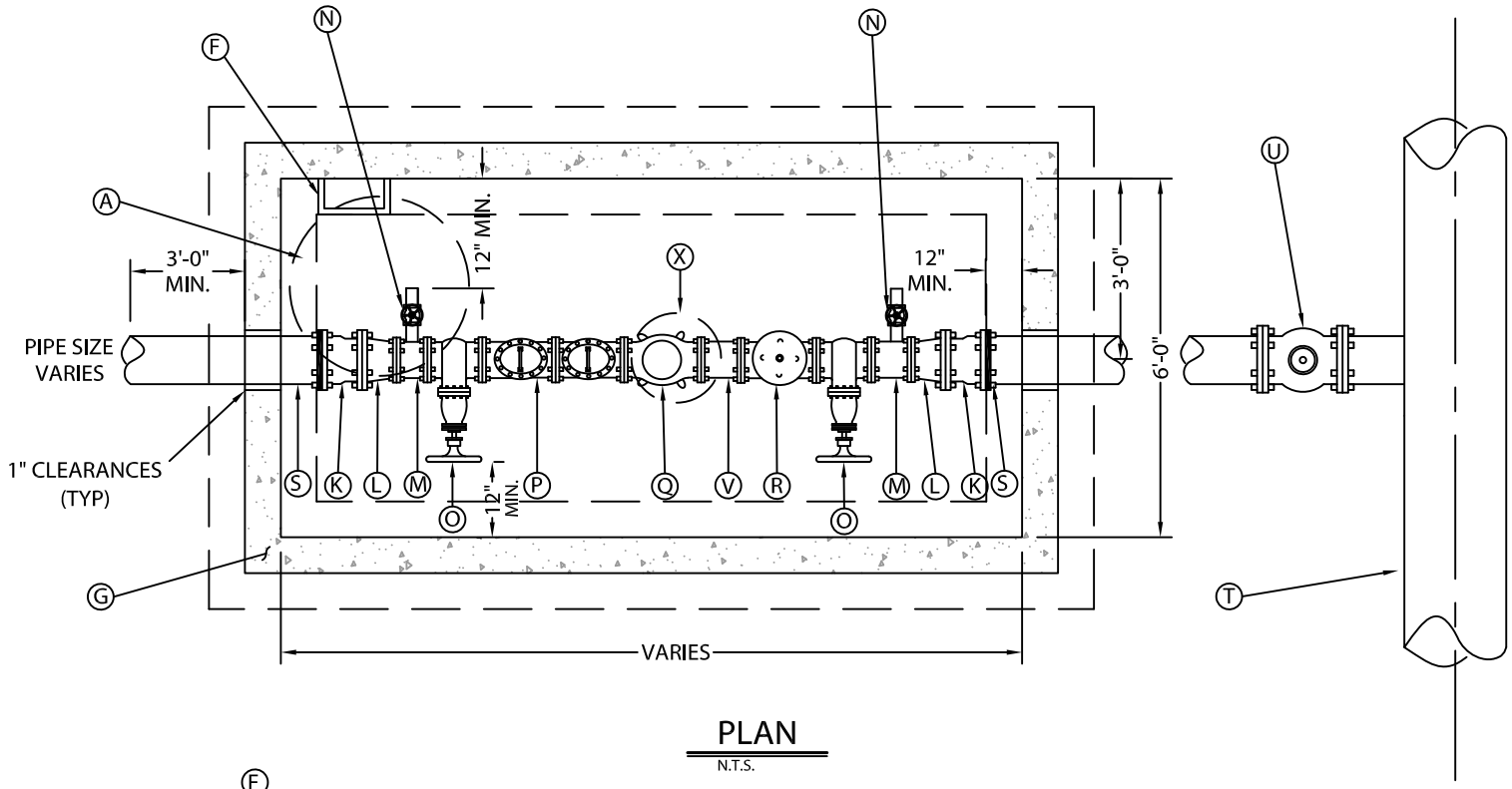

PLAN

N.T.S.

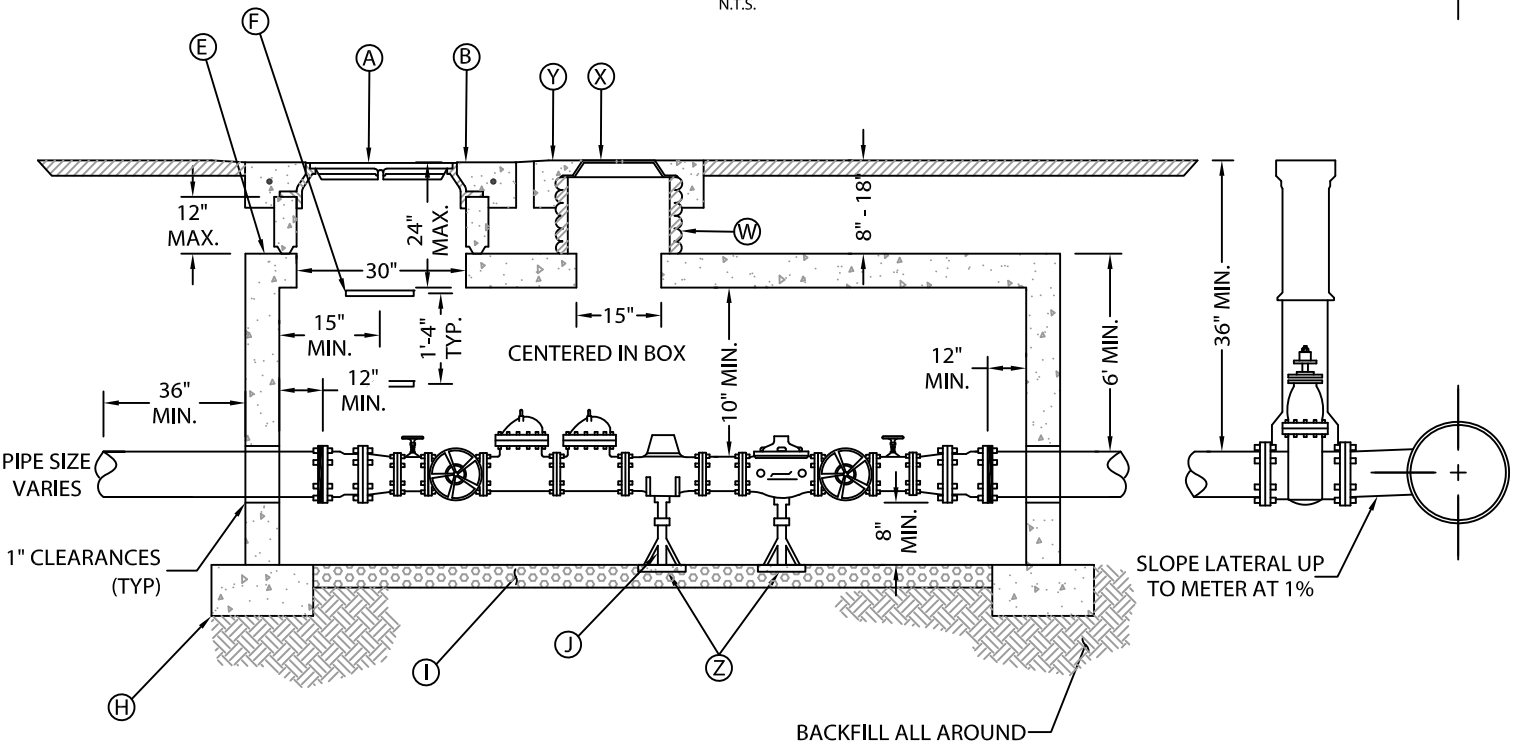

ELEVATION

N.T.S.

ENOCH CITY

ENOCH CITY
900 EAST MIDVALLEY RD
Enoch, UT 84721
Tel. (435) 586-1119

WATER METER w/ FIRE FLOW

(COMBINED CULINARY & PRIVATE FIRE HYDRANT FLOWS)

SCALE:
N.T.S.

DATE:
FEB. 2019

DETAIL No.:

W7.1

SHEET:
1 of 2

Copyright © 2019

LEGEND

NO.	*	ITEM	DESCRIPTION
A		MANHOLE RING AND COVER (RIBLESS)	D&L A-1180 O.A.E.
B		48" SQUARE x 8" THICK CONCRETE COLLAR	w/ 40" SQUARE #4 BARS & FIBERS
C		NOT USED	
D		NOT USED	
E		GRADE RING(S)	MUST BE SEALED
F		MANHOLE STEP	(M.A. INDUSTRIES INC. O.A.E.), (5) EACH
G		CONCRETE VAULT TOP	AMCOR UV6127T O.A.E.
H		9"x18" FOOTING W/ 3-#4 BARS	
I		4" THICK DRAIN GRAVEL	
J		(2) LEVELING JACKS (LENGTH VARIES)	SLIDEWINDER PART #23535 BY BARKER MANUF. CO.
K		6" MIN. FLANGE ADAPTOR	CEMENT LINED
L		X"x6" FLANGED REDUCER (IF REQ'D)	CEMENT LINED
M		6" FLANGED STEEL SPOOL WITH 2" OUTLET	EPOXY COATED AND LINED
N		2" GATE VALVE WITH 4" NIPPLE	
O		6" GATE VALVE WITH HANDWHEEL	NON-RISING STEM
P		6" DOUBLE CHECK DETECTOR VALVE (DCDA)	WATTS SERIES 709 DCA w/ METERED BYPASS
Q		6" COMPOUND FLOW METER (PURCHASED FROM CITY)	COMPOUND w/ STRAINER
R		6" PRESSURE REDUCING VALVE (IF REQ'D)	
S		6" MIN. D.I. PIPE (TO OUTSIDE OF VAULT)	CEMENT LINED
T		CITY WATER MAIN	
U		GATE VALVE WITH BOX	SEE W1
V		6" FLANGED SPOOL 12" LONG	CEMENT LINED
W		18" DIA. HDPE PIPE	PER PIPE SPEC.
X		RING & LID w/ 2" PUNCHOUT	D&L-2241 O.A.E.
Y		30"x30"x8" THICK CONCRETE COLLAR	
Z		12"x12"x2" CONCRETE BLOCK	

NOTES:

1. UNLESS OTHERWISE SHOWN ALL MATERIALS PER ENOCH CITY ENGINEERING STANDARDS.
2. CONCRETE VAULT LENGTH & WIDTH SHALL BE SUFFICIENT TO CONTAIN ALL FITTINGS AND MAINTAIN INDICATED CLEARANCE FROM WALLS.
3. WATER METER LIDS & COVERS SHALL ONLY BE INSTALLED IN LANDSCAPED AREAS UNLESS APPROVED BY WATER SUPERINTENDENT.
4. REQUIRED ON PRIVATE WATER SYSTEMS WITH FIRE HYDRANTS.
5. VAULTS ARE DESIGNED TO MEET ASTM C858 WITH AASHTO HS-20 LOADING.

ENOCH CITY
900 EAST MIDVALLEY RD
Enoch, UT 84721
Tel. (435) 586-1119

Copyright © 2019

WATER METER w/ FIRE FLOW
(COMBINED CULINARY & PRIVATE FIRE HYDRANT FLOWS)

SCALE: N.T.S.
DATE: FEB. 2019
DETAIL No.: W7.2
SHEET: 2 of 2

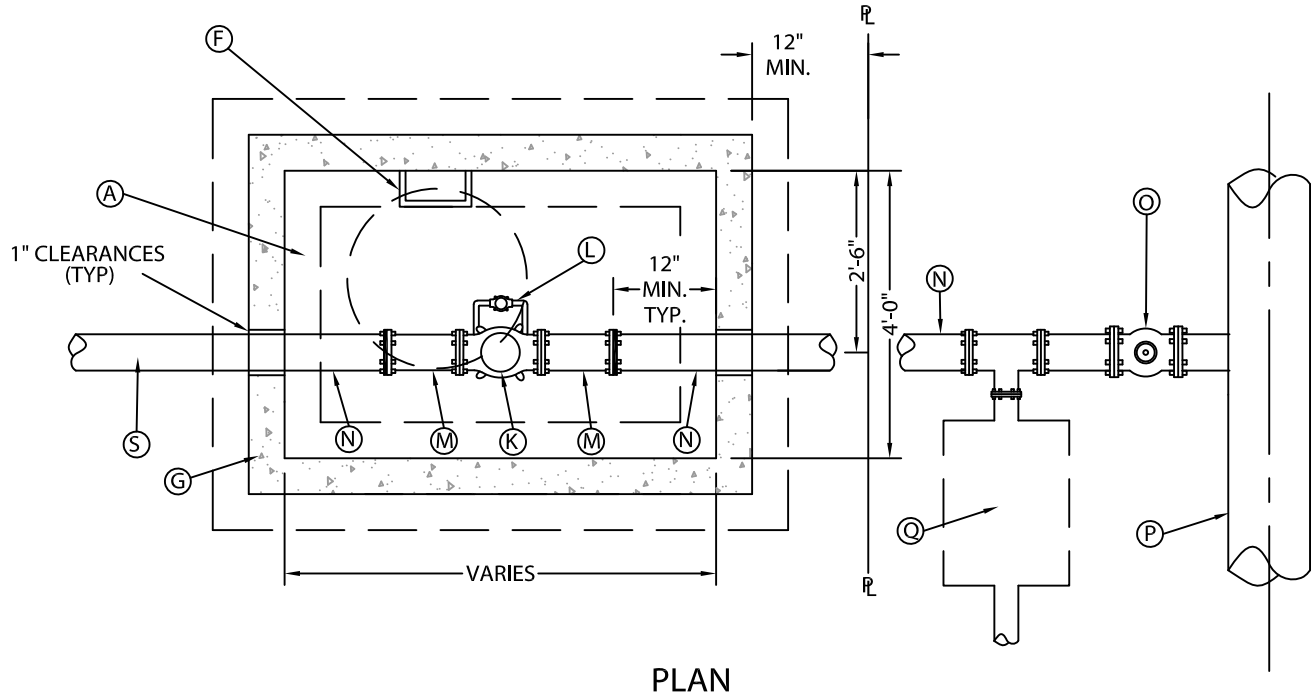

PLAN

N.T.S.

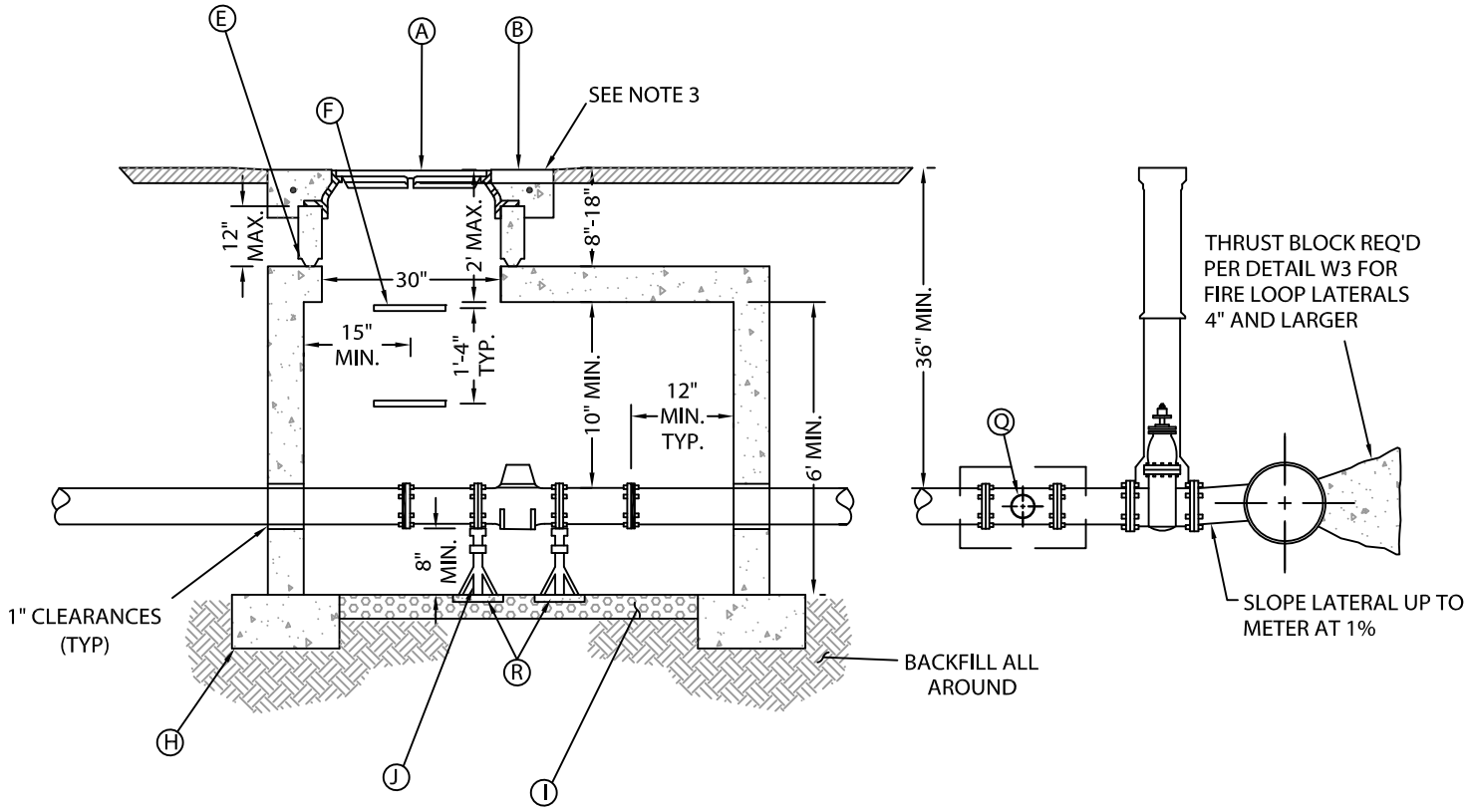

NOTE: ALL VALVES AND FITTINGS
TO BE SAME SIZE AS PIPE.

ELEVATION

N.T.S.

ENOCH CITY

ENOCH CITY
900 EAST MIDVALLEY RD
Enoch, UT 84721
Tel. (435) 586-1119

FIRE LOOP DETECTOR CHECK VALVE

(FIRE FLOWS ONLY)

SCALE:
N.T.S.

DATE:
FEB. 2019

DETAIL No.:

W8.1

SHEET:
1 of 2

Copyright © 2019

LEGEND			
NO.	*	ITEM	DESCRIPTION
A		MANHOLE RING AND COVER (RIBLESS)	D&L A-1180 O.A.E.
B		48" SQUARE x 8" THICK CONCRETE COLLAR	w/ 40" SQUARE #4 BARS & FIBERS
C		NOT USED	
D		NOT USED	
E		GRADE RING(S)	MUST BE SEALED
F		MANHOLE STEP	(M.A. INDUSTRIES INC. O.A.E.), (5) EACH
G		CONCRETE VAULT TOP (4'-0"x 6'-0")	AMCOR UV46T O.A.E.
H		9"x18" FOOTING W/ 3-#4 BARS	
I		4" THICK DRAIN GRAVEL	
J		(2) LEVELING JACKS (LENGTH VARIES)	SLIDEWINDER PART #23535 BY BARKER MANUF. CO.
K		SINGLE LEAK DETECTOR CHECK	WATTS SERIES SS07F O.A.E.
L		¾-INCH BY-PASS KIT	WITH METER AND VALVES
M		FLANGE ADAPTER	CEMENT LINED
N		DUCTILE IRON PIPE	CEMENT LINED
O		GATE VALVE WITH BOX	
P		CITY WATER MAIN	
Q		METER PER DETAIL W5 OR W6	
R		12"x12"x2" CONCRETE BLOCK	
S		PIPE MATERIAL TO BUILDING PER PLUMBING CODE	

NOTES:

1. UNLESS OTHERWISE SHOWN ALL MATERIALS PER ENOCH CITY ENGINEERING STANDARDS.
2. CONCRETE VAULT LENGTH & WIDTH SHALL BE SUFFICIENT TO CONTAIN ALL FITTINGS AND MAINTAIN INDICATED CLEARANCE FROM WALLS.
3. WATER METER LIDS & COVERS SHALL ONLY BE INSTALLED IN LANDSCAPED AREAS UNLESS APPROVED BY WATER SUPERINTENDENT.
4. VAULTS ARE DESIGNED TO MEET ASTM C858 WITH AASHTO HS-20 LOADING.
5. ALL VALVES AND FITTINGS TO BE SAME SIZE AS PIPE.

ENOCH CITY
900 EAST MIDVALLEY RD
Enoch, UT 84721
Tel. (435) 586-1119

Copyright © 2019

FIRE LOOP DETECTOR CHECK VALVE
(FIRE FLOWS ONLY)

SCALE: N.T.S.

DATE: FEB. 2019

DETAIL No.: W8.2

SHEET: 2 of 2

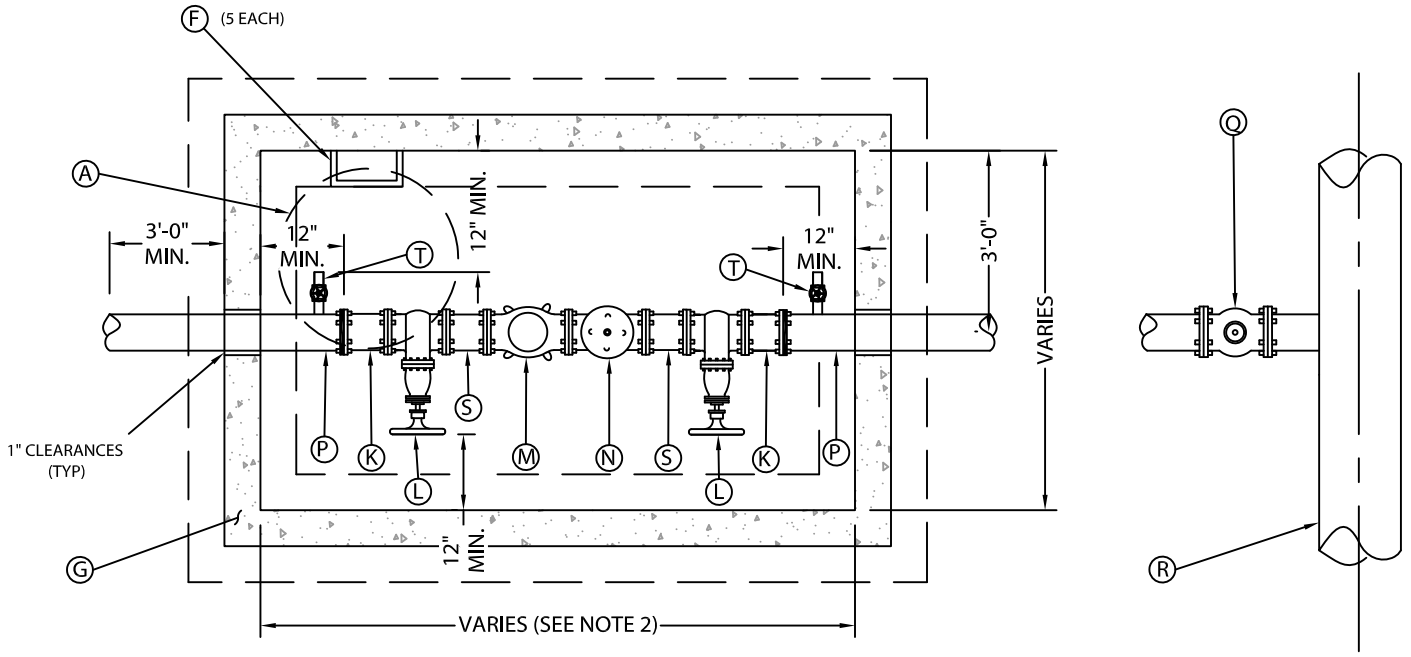

PLAN

N.T.S.

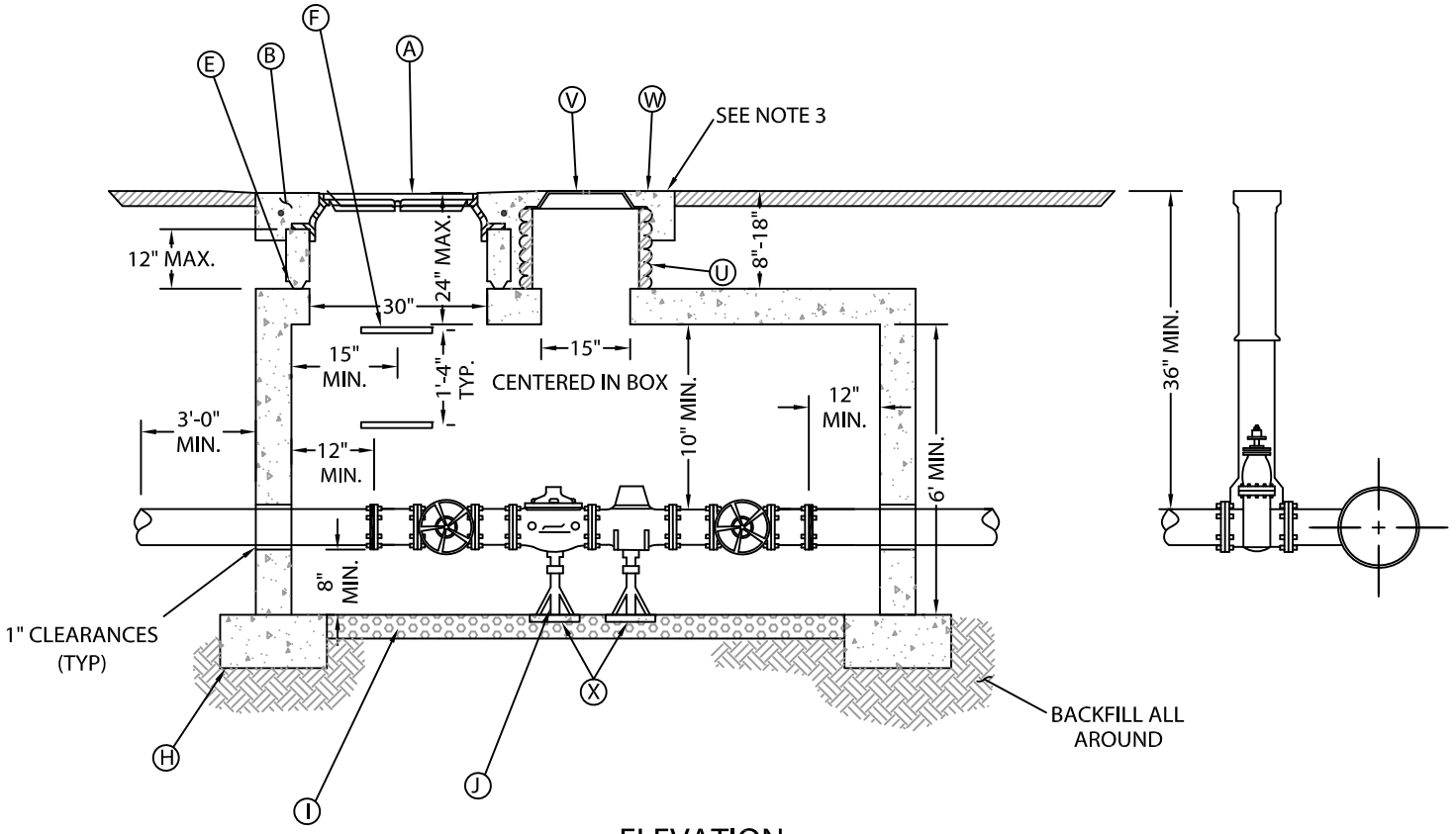

ELEVATION

N.T.S.

ENOCH CITY

ENOCH CITY
900 EAST MIDVALLEY RD
Enoch, UT 84721
Tel. (435) 586-1119

IRRIGATION METER

SCALE: N.T.S.

DATE: FEB. 2019

DETAIL No.: W9.1

SHEET: 1 of 2

Copyright © 2019

LEGEND			
NO.	*	ITEM	DESCRIPTION
A		MANHOLE RING AND COVER (RIBLESS)	D&L A-1180 O.A.E.
B		48" SQUARE x 8" THICK CONCRETE COLLAR	w/ 40" SQUARE #4 BARS & FIBERS
C		NOT USED	
D		NOT USED	
E		GRADE RING(S)	MUST BE SEALED
F		MANHOLE STEP	(M.A. INDUSTRIES INC. O.A.E.)
G		CONCRETE VAULT TOP	AMCOR OR APPROVED EQUAL
H		9"x18" FOOTING W/ 3-#4 BARS	
I		4" THICK DRAIN GRAVEL	
J		(2) LEVELING JACKS (LENGTH VARIES)	SLIDEWINDER PART #23535 BY BARKER MANUF. CO.
K		FLANGE ADAPTOR	CEMENT LINED
L		GATE VALVE WITH HANDWHEEL	NON-RISING STEM
M		FLOW METER (PURCHASED FROM CITY)	METRON SPECTRUM
N		PRESSURE REDUCING VALVE (IF REQ'D)	
P		DUCTILE IRON PIPE (TO OUTSIDE OF VAULT)	
Q		GATE VALVE WITH BOX	SEE W1
R		IRRIGATION MAIN	
S		FLANGED SPOOL 12" LONG	
T		PIPE TAP (SIZE VARIES) WITH GATE VALVE AND 4" NIPPLE	
U		18" DIA. HDPE PIPE	PER PIPE SPEC.
V		RING & LID w/ 2" PUNCHOUT	D&L-2241 O.A.E.
W		30"x30"x8" THICK CONCRETE COLLAR	
X		12"x12"x2" CONCRETE BLOCK	

NOTES:

1. UNLESS OTHERWISE SHOWN ALL MATERIALS PER ENOCH CITY ENGINEERING STANDARDS.
2. CONCRETE VAULT LENGTH & WIDTH SHALL BE SUFFICIENT TO CONTAIN ALL FITTINGS AND MAINTAIN INDICATED CLEARANCE FROM WALLS.
3. WATER METER LIDS & COVERS SHALL ONLY BE INSTALLED IN LANDSCAPED AREAS UNLESS APPROVED BY WATER SUPERINTENDENT.
4. VAULTS ARE DESIGNED TO MEET ASTM C858 WITH AASHTO HS-20 LOADING.
5. ALL VALVES AND FITTINGS TO BE SAME SIZE AS PIPE.

ENOCH CITY
900 EAST MIDVALLEY RD
Enoch, UT 84721
Tel. (435) 586-1119

Copyright © 2019

IRRIGATION METER

SCALE: N.T.S.

DATE: FEB. 2019

DETAIL No.: W9.2

SHEET: 2 of 2

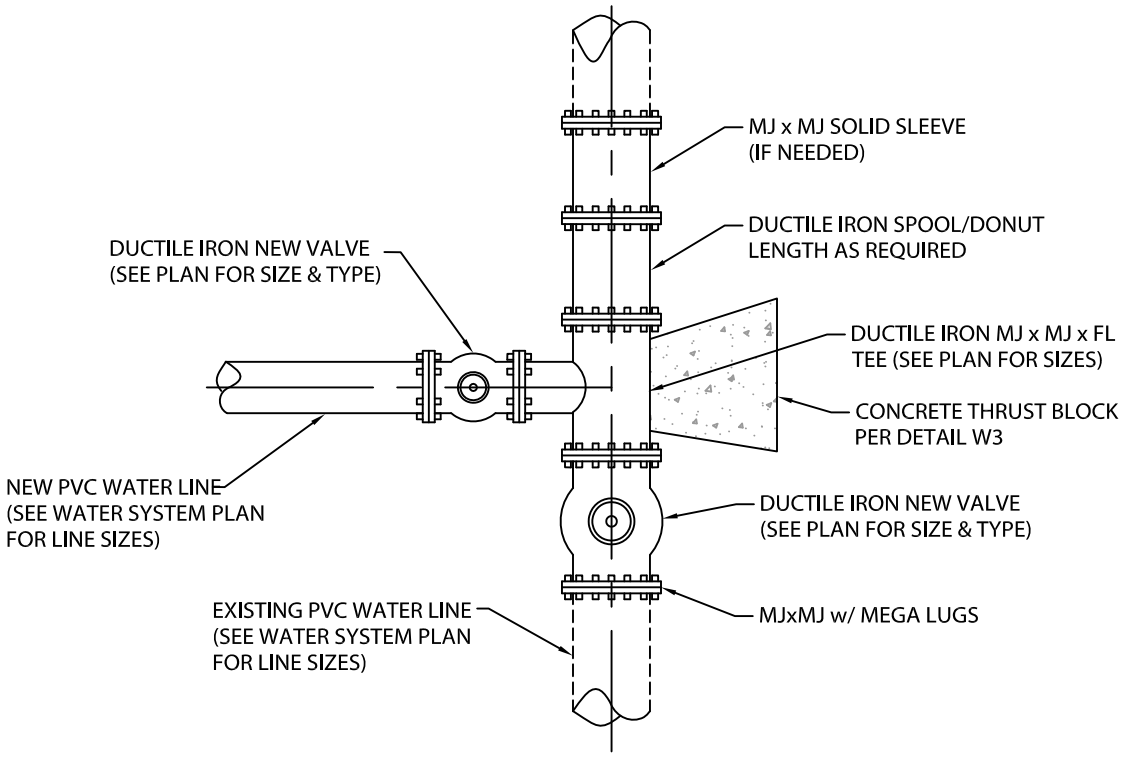

CUT-IN TEE CONNECTION

N.T.S.

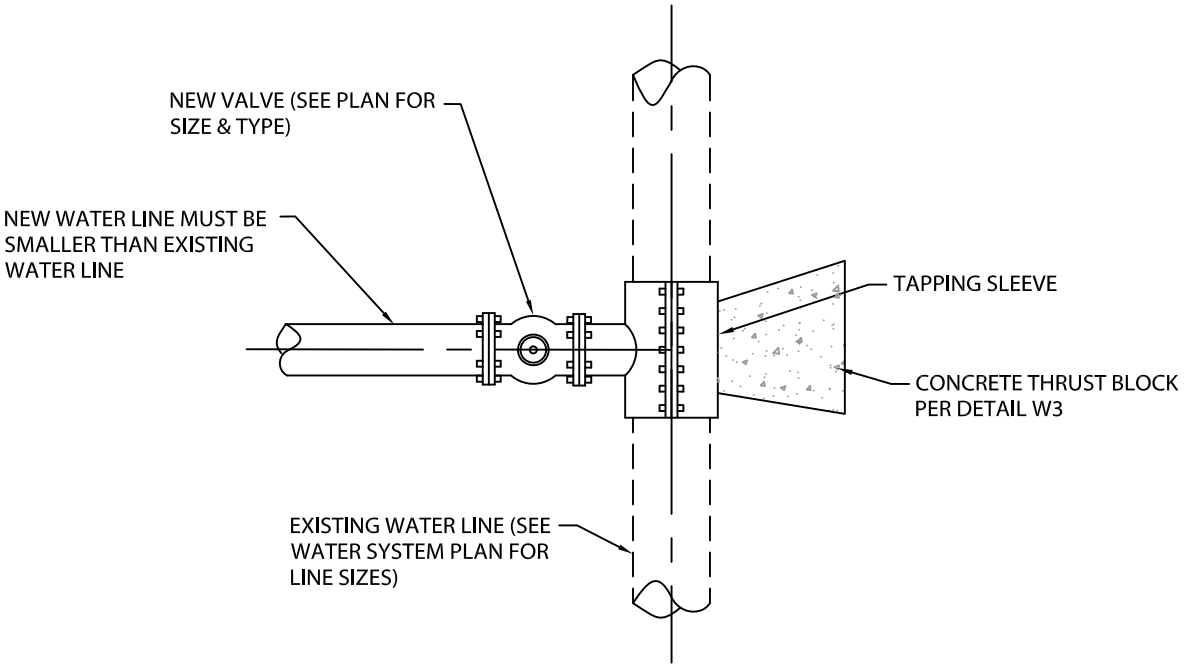

TAPPED CONNECTION

N.T.S.

ENOCH CITY
900 EAST MIDVALLEY RD
Enoch, UT 84721
Tel. (435) 586-1119

Copyright © 2019

WATER MAIN TO MAIN CONNECTION

SCALE:
N.T.S.

DATE:
FEB. 2019

DETAIL No.:

W10

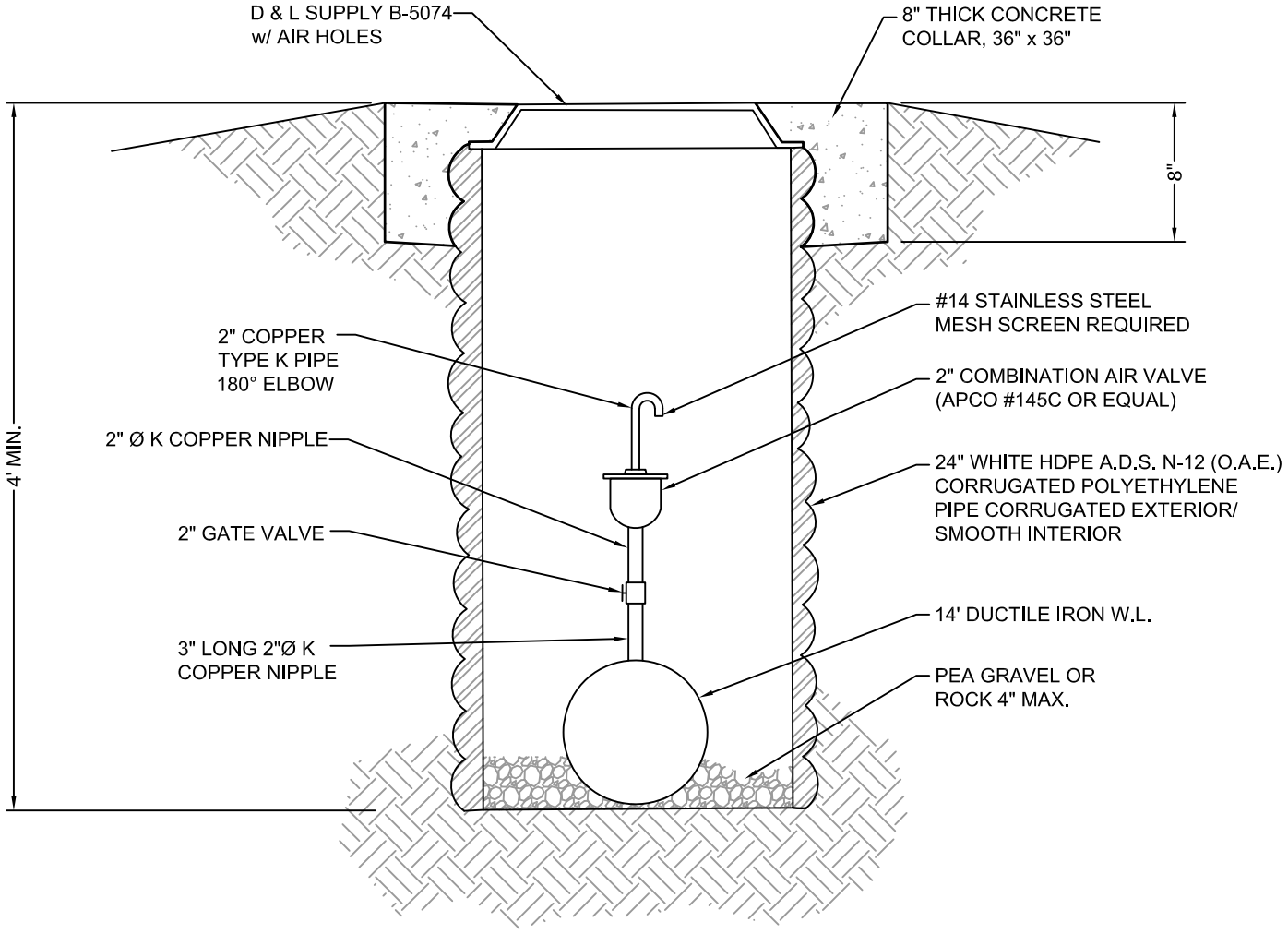

COMBINATION AIR VALVE DETAIL

N.T.S.

ENOCH CITY
900 EAST MIDVALLEY RD
Enoch, UT 84721
Tel. (435) 586-1119

Copyright © 2019

COMBINATION AIR VALVE

SCALE:
N.T.S.

DATE:
FEB. 2019

DETAIL No.:
W11